ACU-TECH®
PIPING SYSTEMS

PRODUCT CATALOGUE

PE PIPE SYSTEMS

ACU-TECH.COM.AU

ACU-TECH®
PIPING SYSTEMS

We'll Make Your Job Easier!

THE HDPE PIPING SPECIALISTS

- ✓ Quality
- ✓ Service
- ✓ Capacity
- ✓ Experience

ISO 9001 Certified ApprovalMark™

WaterMark

We Care.
Our Solutions.
Your Success.

acu-tech.com.au

Company Introduction

ACU-TECH® PIPING SYSTEMS

In every industry and with every service, we can be relied upon to deliver the right solution at the best value.

Acu-Tech® Piping Systems is a manufacturer and supplier specialising in complete polyethylene (HDPE) pipe systems and solutions for fluid / gas transfer and cable protection.

Working directly with owners, engineers and contractors, Acu-Tech helps to create pipeline assets which are both durable and cost-effective.

Acu-Tech supplies complete application specific pipe system packages including valves, fusion welding equipment, training and technical support.

A lot has changed since Acu-Tech was founded in 2000 by Ivan Morren operating from 3 sea containers, and the company continues to innovate and evolve. Now with a growing team at our state-of-the-art 40,000m² facilities in Perth, as well as branches in Brisbane and Melbourne, we offer our clients the complete solution package.

"What hasn't changed is our positive 'can do' culture and our commitment to building long term relationships."

Put Your Trust in Quality & Expertise

What makes us different?

- We ***listen*** and work closely with our clients to understand their challenges.
- We help ***define*** the solution that is right for them using our materials, technology, training and installation methodology.
- We ***solve*** problems drawing on our breadth of knowledge and experience, and our supply capabilities.
- We ***deliver*** pipeline solutions that are right for the industries we serve.

Why choose Acu-Tech?

12 reasons why companies choose Acu-Tech Piping Systems *as their HDPE pipeline supply partner:*

TRUST

- Experience – most highly trained and experienced team in the industry with over 150 years of combined experience.
- Responsiveness – the company owner is the CEO and directly involved, so decisions are made quickly in response to your requests.
- Track record – Proven with thousands of projects completed, with references available.

CONFIDENCE

- Teamwork – we work with our customers to understand their business, meet their requirements and deliver upon their priorities and objectives.
- Reliability – Acu-Tech will supply on-time, as specified, and with all documentation.
- Capacity – Acu-Tech has what it takes to deliver on major projects.

QUALITY ASSURANCE

- Quality Management Systems certified to ISO 9001 and ISO/TS 29001.
- Piping products certified to AS/NZS 4130. Only 100% approved AS/NZS 4131 PE100 raw material used (no second hand or contaminated material).
- As the manufacturer, we have complete control from raw material to delivery.

TECHNICAL EXPERTISE & SUPPORT

- Technical support service for designers, engineers and installers.
- Fusion Weld Training through our Registered Training Organisation partner.
- Fully equipped NATA accredited laboratory for destructive joint and material testing. Onsite QA also available.

What Our Clients Say

"Your professionalism was instrumental in achieving a positive result for all stakeholders."

- Project and Resource Logistics

Sino Iron Ore Project

"I would like to thank you and Acu-Tech for the wonderful service you have provided. Personally I will always use Acu-Tech as the first 'port of call' for any future poly requirements."

- Site Supervisor

Koolyanobbing Project

"The conduct was outstanding. Acu-Tech's flexibility in meeting our needs and the integrity of products and services is worthy of special mention."

- Site Engineer

Esperance Port Access Corridor

Trusted by Major Companies

Fortescue · RioTinto · Newmont · Alcoa · AngloGold Ashanti · bhpbilliton

acu-tech.com.au

ACU-TECH® PIPING SYSTEMS

IMPORTANT NOTICE
Notes on the use of this catalogue:

The "Family" code shown at the top of every page refers to the fitting TYPE.
E.g.: 2014 is the code for an electrofusion coupler. The next four numbers refer to the SIZE; e.g., 0110 is the code for a 110 mm fitting, 1163 for a 110 mm x 63 mm reducer; therefore the code for a 110 mm electrofusion coupler is 2014.0110 and a 110 mm x 63 mm reducer would be 2034.1163.

As always with Acu-Tech technical information, we supply it as a guide in the interest of better understanding of technical properties of our products It represents the best information available to us at the time of publication. However, the application of such information may involve engineering judgements which cannot be correctly made without intimate knowledge of all the conditions pertaining to a specific installation. Acu-Tech does not act as a consultant in this regard; the responsibility for the use of any information or advice contained herein rests solely with the user. No warranty, expressed or implied, (other than Statutory Warranty) is given as to the information or results obtained by the use thereof, and Acu-Tech will not be held liable for any costs, direct or indirect, that may arise therefrom. All pressure ratings given are subject to applicable regulations and standards. For further information please contact our Technical team or check with your local regulatory authority.

Indemnity: Company policy is one of continual improvement, therefore changes in product dimensions, specifications and performance data may be made without prior notice and without incurring liability. All dimensions shown in this catalogue are intended as a guide only. If exact measurements are required, please contact our sales team.

Please contact our sales team if there is any items required which are not shown in this catalogue. We are also able to source and supply a wide range of associated products such as valves and non-standard flanges.

© 2022. V317

Call us now on 1300 270 270

CONTENTS

1. ACU-TECH PRESSURE PIPE

Dimensions Overview 12-13
Dimensions Detail 14-16
Coil Dimensions 17
Imperial (Rural) 18
Striping and Colour Coding 19

2. BUTT WELD & FABRICATED ITEMS

90° Sweep Bend 22
60° Sweep Bend 23
45° Sweep Bend 24
30° Sweep Bend 25
15° Sweep Bend 26
90° Segmented Bend 27
45° Segmented Bend 28
90° Short Radius Bend 29
Fabricated Reducing Tee 30-31
Fabricated Equal Tee 32
Fabricated True Y Junction 33
Fabricated 45° Junction 34
Short Spigot Eccentric Reducer 35
Short Spigot Concentric Reducer 36-37
Short Spigot End Cap 38
Shouldered End 39
Custom and Specialised Fittings 40-41

3. FLANGE, BACKING RING & GASKET

Butt Weld Stub Flange 44
Long Spigot Stub Flange 45
Max Flange 46
Blind Flange 47
Table D Backing Ring 48
Table E Backing Ring 49
Table ANSI 150 Backing Ring 50-51
DCI Female Threaded Tapping Band 52-53
EPDM Flange Gasket 54
Fibre Flange Gasket 55
Steel Core Flange Gasket 56-57
Butterfly Value Spacer 58
Bolt Sets 59

4. SPIGOT FITTINGS

90° Long Spigot Elbow 62
45° Long Spigot Elbow 63
30° Long Spigot Elbow 64
90° Long Spigot Radius Bend 65
Long Spigot Equal Tee 66
Long Spigot Reducing Tee 67
45° Long Spigot Equal Tee 68
Concentric Long Spigot Reducer 69
Long Spigot End Cap 70
Long Spigot Test End Cap 71
PE/Brass Male Threaded Adaptor 72
PE/Brass Female Threaded Adaptor 73
PE Male BSP Adaptor 74
PE Female BSP Adaptor 75

5. ELECTROFUSION FITTINGS

EF Coupler 78
EF Reducer 79
EF 90° Elbow 80
EF 45° Elbow 81
EF Equal Tee 82
EF Reducing Tee 83
EF Tapping Saddle 84
EF Branch Saddle 85
EF End Cap 86
EF Test End Cap with Brass Male BSP Thread 87

6. ADDITIONAL SERVICES

Fabrication Services 90-93
Equipment Sales and Hire 94-97
Polyweld Tech Academy 98-99

7. USEFUL INFORMATION

Truck Pipe and Coil Capacity 102

ACU-TECH
PE PRESSURE PIPE

Acu-Tech's high quality HDPE Pressure Pipe is manufactured from AS/NZS 4131 PE100 raw material and WaterMark Certified to AS/NZS 4130.

Available from 20mm up to 1200mm in diameter, Acu-Tech PE100 pipe is available in coils and straight lengths with the option of striping or full coating for system specific colour coding. We hold a complete stock of common sizes and SDR ratings. Call us on 1300 270 270 to discuss your requirements.

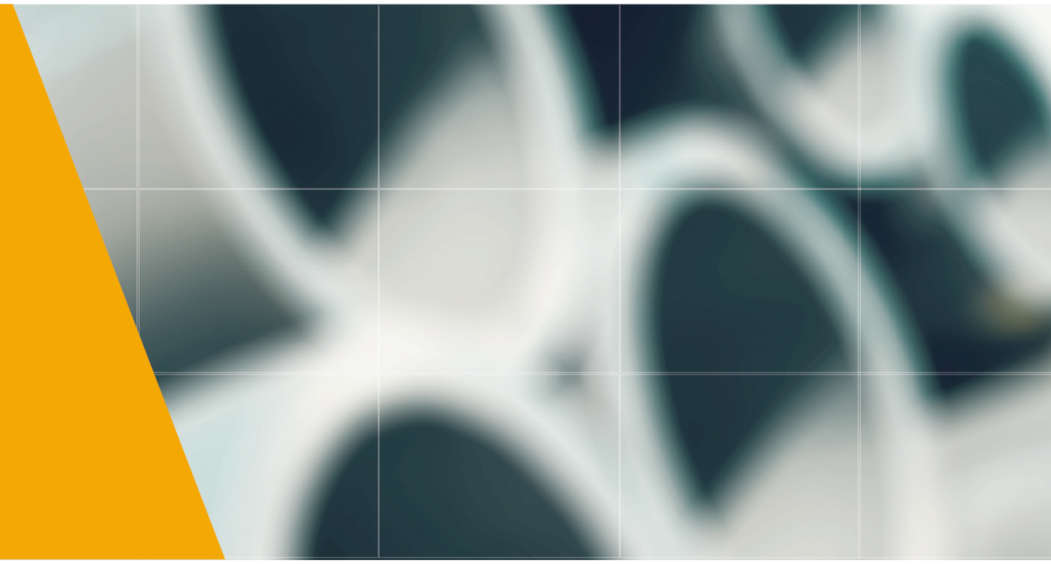

PE100 Polyethylene Pipe Overview 12-13
PE100 Polyethylene Pipe Dimensions Detail 14-16
PE100 Polyethylene Coil Dimensions Overview 17
Imperial (Rural) Polyethylene Pipe 18
Striping and Colour Coding Guide 19

PE100 POLYETHYLENE PIPE - OVERVIEW

MEAN DIMENSIONS ACCORDING TO AS/NZS 4130 SERIES 1

OD	SDR41 PN 4			SDR26 PN 6.3			SDR21 PN 8			SDR 17 PN 10		
	WT	ID	KG/M	WT	ID	KG/M	WT	ID	KG/M	WT	ID	KG/M
16	-	-	-	-	-	-	-	-	-	-	-	-
20	-	-	-	-	-	-	-	-	-	-	-	-
25	-	-	-	-	-	-	-	-	-	1.8	21.7	0.1
32	-	-	-	-	-	-	1.8	28.7	0.2	2.1	28.1	0.2
40	-	-	-	-	-	-	2.1	36.1	0.2	2.6	35.0	0.3
50	-	-	-	-	-	-	2.6	45.1	0.4	3.2	43.9	0.5
63	-	-	-	2.6	58.1	0.5	3.2	56.9	0.6	4.1	55.2	0.7
75	-	-	-	3.1	69.2	0.7	3.9	67.7	0.8	4.8	65.8	1.0
90	-	-	-	3.8	83.0	1.0	4.6	81.3	1.2	5.8	79.0	1.5
110	2.9	104.7	0.9	4.6	101.3	1.5	5.7	99.2	1.8	7.0	96.5	2.2
125	3.4	118.9	1.2	5.1	115.4	1.9	6.4	112.9	2.3	7.9	109.9	2.8
140	3.8	133.2	1.6	5.8	129.2	2.3	7.1	126.5	2.9	8.8	123.1	3.5
160	4.3	152.3	2.0	6.6	147.6	3.1	8.2	144.5	3.8	10.1	140.7	4.6
180	4.7	171.5	2.5	7.3	166.3	3.8	9.1	162.7	4.7	11.3	158.3	5.8
200	5.2	190.5	3.1	8.2	184.6	4.7	10.2	180.6	5.8	12.6	175.8	7.1
225	5.9	214.4	3.9	9.1	207.9	6.0	11.4	203.3	7.4	14.2	197.8	9.0
250	6.6	238.0	4.9	10.2	230.9	7.4	12.6	226.1	9.0	15.6	220.0	11.1
280	7.3	266.7	6.0	11.3	258.7	9.2	14.2	253.0	11.4	17.5	246.3	13.9
315	8.2	300.2	7.6	12.8	290.9	11.7	15.8	284.9	14.3	19.7	277.1	17.6
355	9.2	338.2	9.6	14.4	327.9	14.8	17.8	321.0	18.2	22.3	312.1	22.4
400	10.4	381.1	12.2	16.2	369.5	18.8	20.2	361.5	23.2	25.0	351.9	28.3
450	11.6	428.9	15.4	18.2	415.8	23.7	22.7	406.8	29.3	28.1	395.9	35.9
500	13.0	476.3	19.2	20.2	462.0	29.3	25.2	452.0	36.2	31.2	440.0	44.2
560	14.5	533.6	23.9	22.6	517.4	36.7	28.1	506.3	45.3	35.0	492.6	55.6
630	16.3	600.4	30.2	25.4	582.1	46.5	31.6	569.8	57.2	39.3	554.4	70.2
710	18.4	676.5	38.4	28.7	655.9	59.1	35.7	641.9	72.8	44.3	624.6	89.3
800	20.7	762.3	48.7	32.2	739.2	74.8	40.1	723.4	92.3	49.9	703.9	113.2
900	23.2	857.8	61.5	36.2	831.7	94.7	45.1	813.9	116.7	56.3	791.6	143.7
1000	25.8	952.9	76.1	40.2	924.1	116.8	50.2	904.2	144.2	62.4	879.8	177.0
1200	31.0	1143.1	109.5	48.3	1108.5	168.2	60.2	1084.7	207.5	71.4	1062.3	243.7

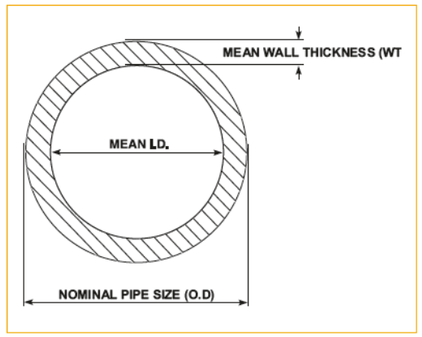

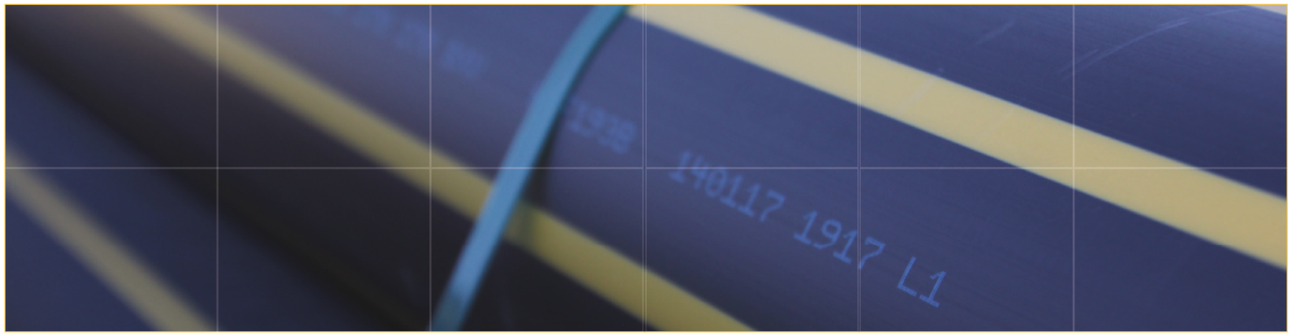

PE100 POLYETHYLENE PIPE - OVERVIEW Cont'd

MEAN DIMENSIONS ACCORDING TO AS/NZS 4130 SERIES 1

OD	SDR13.6 PN 12.5			SDR11 PN 16			SDR9 PN 20			SDR 7.4 PN 25		
	WT	ID	KG/M	WT	ID	KG/M	WT	ID	KG/M	WT	ID	KG/M
16	-	-	-	1.8	12.7	0.1	2.0	12.3	0.1	2.4	11.4	0.1
20	1.8	16.7	0.1	2.1	16.1	0.1	2.5	15.2	0.1	3.0	14.2	0.2
25	2.1	21.1	0.1	2.5	20.2	0.2	3.0	19.2	0.2	3.8	17.7	0.2
32	2.6	27.0	0.2	3.1	26.0	0.3	3.9	24.5	0.3	4.7	22.8	0.4
40	3.2	33.8	0.4	4.0	32.3	0.4	4.8	30.6	0.5	5.9	28.5	0.6
50	4.0	42.4	0.6	4.9	40.5	0.7	6.0	38.4	0.8	7.3	35.7	0.9
63	5.0	53.3	0.9	6.2	51.0	1.1	7.6	48.2	1.3	9.1	45.1	1.5
75	5.9	63.7	1.2	7.2	61.0	1.5	8.9	57.6	1.8	10.9	53.6	2.1
90	7.0	76.5	1.8	8.7	73.1	2.1	10.7	69.1	2.6	13.0	64.5	3.0
110	8.6	93.3	2.6	10.6	89.4	3.2	13.0	84.5	3.8	16.0	78.6	4.5
125	9.8	106.1	3.4	12.1	101.5	4.1	14.8	96.1	4.9	18.1	89.5	5.9
140	10.9	118.9	4.3	13.4	113.9	5.1	16.6	107.6	6.2	20.3	100.2	7.3
160	12.5	135.9	5.6	15.4	130.0	6.7	18.9	123.1	8.1	23.1	114.7	9.6
180	14.1	152.8	7.1	17.3	146.3	8.5	21.2	138.5	10.2	25.9	129.1	12.1
200	15.5	169.9	8.7	19.2	162.5	10.5	23.6	153.7	12.6	28.8	143.4	14.9
225	17.5	191.1	11.0	21.6	182.9	13.3	26.5	173.2	15.9	32.4	161.3	18.9
250	19.4	212.4	13.6	23.9	203.4	16.4	29.4	192.5	19.6	36.0	179.2	23.3
280	21.7	237.9	17.0	26.8	227.8	20.5	33.0	215.4	24.6	40.3	200.7	29.3
315	24.5	267.6	21.5	30.1	256.3	26.0	37.1	242.4	31.2	45.2	226.1	36.9
355	27.5	301.6	27.3	33.9	288.8	33.0	41.7	273.3	39.5	51.0	254.6	47.0
400	31.0	339.9	34.6	38.2	325.4	41.9	47.0	307.8	50.2	57.4	287.0	59.6
450	34.9	382.4	43.8	43.0	366.1	53.0	52.8	346.5	63.5	64.7	322.8	75.5
500	38.7	424.9	54.1	47.8	406.8	65.4	58.7	385.0	78.4	71.1	360.2	92.6
560	43.4	475.8	67.8	53.4	455.7	81.9	65.7	431.1	98.3	-	-	-
630	48.7	535.5	85.7	60.2	512.6	103.8	73.9	485.1	124.4	-	-	-
710	54.9	603.4	108.9	67.8	577.6	131.8	83.4	546.5	158.2	-	-	-
800	61.8	680.0	138.1	76.3	651.1	167.1	93.9	615.9	200.7	-	-	-
900	69.9	764.9	175.0	85.9	732.4	211.6	-	-	-	-	-	-
1000	76.2	852.1	213.1	94.8	814.9	259.8	-	-	-	-	-	-
1200	92.7	1019.6	310.7	-	-	-	-	-	-	-	-	-

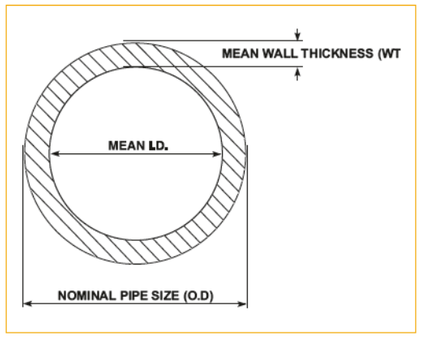

PE100 POLYETHYLENE PIPE - DIMENSIONS

ACCORDING TO AS/NZS 4130 SERIES 1

STANDARD DIMENSION RATIO				SDR 41				SDR 33				SDR 26			
NOMINAL OUTSIDE DIAMETER (DN)	MEAN OUTSIDE DIAMETER		OOR*	WALL THICKNESS (WT)		MEAN INSIDE DIAMETER (ID)		WALL THICKNESS (WT)		MEAN INSIDE DIAMETER (ID)		WALL THICKNESS (WT)		MEAN INSIDE DIAMETER (ID)	
	MIN	MAX	MAX	MIN	MAX	MIN	MAX	MIN	MAX	MIN	MAX	MIN	MAX	MIN	MAX
16	16.0	16.3	1.2	-	-	-	-	-	-	-	-	-	-	-	-
20	20.0	20.3	1.2	-	-	-	-	-	-	-	-	-	-	-	-
25	25.0	25.3	1.2	-	-	-	-	-	-	-	-	-	-	-	-
32	32.0	32.3	1.3	-	-	-	-	-	-	-	-	-	-	-	-
40	40.0	40.4	1.4	-	-	-	-	-	-	-	-	-	-	-	-
50	50.0	50.5	1.4	-	-	-	-	-	-	-	-	-	-	-	-
63	63.0	63.6	1.5	-	-	-	-	-	-	-	-	2.4	2.8	57.4	58.8
75	75.0	75.7	1.6	-	-	-	-	2.3	2.7	69.6	71.1	2.9	3.3	68.4	69.9
90	90.0	90.9	1.8	-	-	-	-	2.8	3.2	83.6	85.3	3.5	4.0	82.0	83.9
110	110.0	111.0	2.2	2.7	3.1	103.8	105.6	3.4	3.9	102.2	104.2	4.3	4.9	100.2	102.4
125	125.0	126.2	2.5	3.1	3.6	117.8	120.0	3.9	4.4	116.2	118.4	4.8	5.4	114.2	116.6
140	140.0	141.3	2.8	3.5	4.0	132.0	134.3	4.3	4.9	130.2	132.7	5.4	6.1	127.8	130.5
160	160.0	161.5	3.2	4.0	4.5	151.0	153.5	4.9	5.5	149.0	151.7	6.2	7.0	146.0	149.1
180	180.0	181.7	3.6	4.4	5.0	170.0	172.9	5.5	6.2	167.6	170.7	6.9	7.7	164.6	167.9
200	200.0	201.8	4.0	4.9	5.5	189.0	192.0	6.2	7.0	186.0	189.4	7.7	8.6	182.8	186.4
225	225.0	227.1	4.5	5.5	6.2	212.6	216.1	6.9	7.7	209.6	213.3	8.6	9.6	205.8	209.9
250	250.0	252.3	5.0	6.2	7.0	236.0	239.9	7.7	8.6	232.8	236.9	9.6	10.7	228.6	233.1
280	280.0	282.6	9.8	6.9	7.7	264.6	268.8	8.6	9.6	260.8	265.4	10.7	11.9	256.2	261.2
315	315.0	317.9	11.1	7.7	8.6	297.8	302.5	9.7	10.8	293.4	298.5	12.1	13.5	288.0	293.7
355	355.0	358.2	12.5	8.7	9.7	335.6	340.8	10.9	12.1	330.8	336.4	13.6	15.1	324.8	331.0
400	400.0	403.6	14.0	9.8	10.9	378.2	384.0	12.3	13.7	372.6	379.0	15.3	17.0	366.0	373.0
450	450.0	454.1	15.6	11.0	12.2	425.6	432.1	13.8	15.3	419.4	426.5	17.2	19.1	411.8	419.7
500	500.0	504.5	17.5	12.3	13.7	472.6	479.9	15.3	17.0	466.0	473.9	19.1	21.2	457.6	466.3
560	560.0	565.0	19.6	13.7	15.2	529.6	537.6	17.2	19.1	521.8	530.6	21.4	23.7	512.6	522.2
630	630.0	635.7	22.1	15.4	17.1	595.8	604.9	19.3	21.4	587.2	597.1	24.1	26.7	576.6	587.5
710	710.0	716.4	24.9	17.4	19.3	671.4	681.6	21.8	24.1	661.8	672.8	27.2	30.1	649.8	662.0
800	800.0	807.2	28.0	19.6	21.7	756.6	768.0	24.5	27.1	745.8	758.2	30.6	33.8	732.4	746.0
900	900.0	908.1		22.0	24.3	851.4	864.1	27.6	30.5	839.0	852.9	34.4	38.0	824.0	839.3
1000	1000.0	1009.0		24.5	27.1	945.8	960.0	30.6	33.8	932.4	947.8	38.2	42.2	915.6	932.6
1200	1200.0	1210.0		29.4	32.5	1135.0	1151.2	36.7	40.5	1119.0	1136.6	45.9	50.6	1098.8	1118.2

*OUT OF ROUNDNESS.

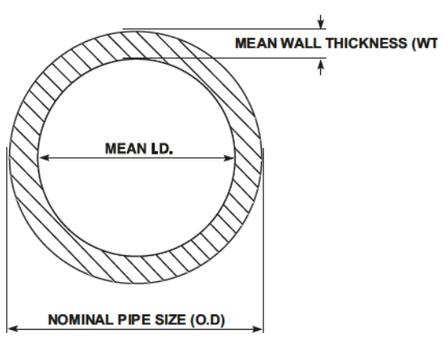

PE100 POLYETHYLENE PIPE - DIMENSIONS Cont'd

ACCORDING TO AS/NZS 4130 SERIES 1

STANDARD DIMENSION RATIO				SDR 21				SDR 17				SDR 13.6			
NOMINAL OUTSIDE DIAMETER (DN)	MEAN OUTSIDE DIAMETER		OOR*	WALL THICKNESS (WT)		MEAN INSIDE DIAMETER (ID)		WALL THICKNESS (WT)		MEAN INSIDE DIAMETER (ID)		WALL THICKNESS (WT)		MEAN INSIDE DIAMETER (ID)	
	MIN	MAX	MAX	MIN	MAX	MIN	MAX	MIN	MAX	MIN	MAX	MIN	MAX	MIN	MAX
16	16.0	16.3	1.2	-	-	-	-	-	-	-	-	-	-	-	-
20	20.0	20.3	1.2	-	-	-	-	-	-	-	-	1.6	1.9	16.2	17.1
25	25.0	25.3	1.2	-	-	-	-	1.6	1.9	21.2	22.1	1.9	2.2	20.6	21.5
32	32.0	32.3	1.3	1.6	1.9	28.2	29.1	1.9	2.2	27.6	28.5	2.4	2.8	26.4	27.5
40	40.0	40.4	1.4	1.9	2.2	35.6	36.6	2.4	2.8	34.4	35.6	3.0	3.4	33.2	34.4
50	50.0	50.5	1.4	2.4	2.8	44.4	45.7	3.0	3.4	43.2	44.5	3.7	4.2	41.6	43.1
63	63.0	63.6	1.5	3.0	3.4	56.2	57.6	3.8	4.3	54.4	56.0	4.7	5.3	52.4	54.2
75	75.0	75.7	1.6	3.6	4.1	66.8	68.5	4.5	5.1	64.8	66.7	5.5	6.2	62.6	64.7
90	90.0	90.9	1.8	4.3	4.9	80.2	82.3	5.4	6.1	77.8	80.1	6.6	7.4	75.2	77.7
110	110.0	111.0	2.2	5.3	6.0	98.0	100.4	6.6	7.4	95.2	97.8	8.1	9.1	91.8	94.8
125	125.0	126.2	2.5	6.0	6.7	111.6	114.2	7.4	8.3	108.4	111.4	9.2	10.3	104.4	107.8
140	140.0	141.3	2.8	6.7	7.5	125.0	127.9	8.3	9.3	121.4	124.7	10.3	11.5	117.0	120.7
160	160.0	161.5	3.2	7.7	8.6	142.8	146.1	9.5	10.6	138.8	142.5	11.8	13.1	133.8	137.9
180	180.0	181.7	3.6	8.6	9.6	160.8	164.5	10.7	11.9	156.2	160.3	13.3	14.8	150.4	155.1
200	200.0	201.8	4.0	9.6	10.7	178.6	182.6	11.9	13.2	173.6	178.0	14.7	16.3	167.4	172.4
225	225.0	227.1	4.5	10.8	12.0	201.0	205.5	13.4	14.9	195.2	200.3	16.6	18.4	188.2	193.9
250	250.0	252.3	5.0	11.9	13.2	223.6	228.5	14.8	16.4	217.2	222.7	18.4	20.4	209.2	215.5
280	280.0	282.6	9.8	13.4	14.9	250.2	255.8	16.6	18.4	243.2	249.4	20.6	22.8	234.4	241.4
315	315.0	317.9	11.1	15.0	16.6	281.8	287.9	18.7	20.7	273.6	280.5	23.2	25.7	263.6	271.5
355	355.0	358.2	12.5	16.9	18.7	317.6	324.4	21.1	23.4	308.2	316.0	26.1	28.9	297.2	306.0
400	400.0	403.6	14.0	19.1	21.2	357.6	365.4	23.7	26.2	347.6	356.2	29.4	32.5	335.0	344.8
450	450.0	454.1	15.6	21.5	23.8	402.4	411.1	26.7	29.5	391.0	400.7	33.1	36.6	376.8	387.9
500	500.0	504.5	17.5	23.9	26.4	447.2	456.7	29.6	32.7	434.6	445.3	36.8	40.6	418.8	430.9
560	560.0	565.0	19.6	26.7	29.5	501.0	511.6	33.2	36.7	486.6	498.6	41.2	45.5	469.0	482.6
630	630.0	635.7	22.1	30.0	33.1	563.8	575.7	37.3	41.2	547.6	561.1	46.3	51.1	527.8	543.1
710	710.0	716.4	24.9	33.9	37.4	635.2	648.6	42.1	46.5	617.0	632.2	52.2	57.6	594.8	612.0
800	800.0	807.2	28.0	38.1	42.1	715.8	731.0	47.4	52.3	695.4	712.4	58.8	64.8	670.4	689.6
900	900.0	908.1		42.9	47.3	805.4	822.3	53.5	59.0	782.0	801.1	66.2	73.0	754.0	775.7
1000	1000.0	1009.0		47.7	52.6	894.8	913.6	59.3	65.4	869.2	890.4	72.5	79.9	840.2	864.0
1200	1200.0	1210.0		57.2	63.1	1073.8	1095.6	67.9	74.8	1050.4	1074.2	88.2	97.2	1005.6	1033.6

*OUT OF ROUNDNESS.

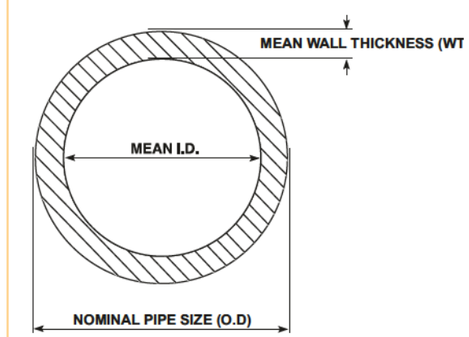

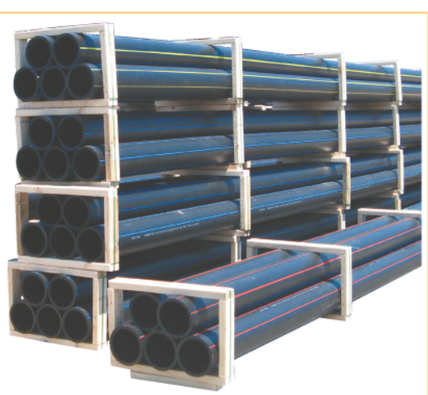

PE100 POLYETHYLENE PIPE - DIMENSIONS Cont'd

ACCORDING TO AS/NZS 4130 SERIES 1

STANDARD DIMENSION RATIO				SDR 11				SDR 9				SDR 7.4			
NOMINAL OUTSIDE DIAME-TER (DN)	MEAN OUTSIDE DIAMETER		OOR*	WALL THICKNESS (WT)		MEAN INSIDE DIAMETER (ID)		WALL THICKNESS (WT)		MEAN INSIDE DIAMETER (ID)		WALL THICKNESS (WT)		MEAN INSIDE DIAMETER (ID)	
	MIN	MAX	MAX	MIN	MAX	MIN	MAX	MIN	MAX	MIN	MAX	MIN	MAX	MIN	MAX
16	16.0	16.3	1.2	1.6	1.9	12.2	13.1	1.8	2.1	11.8	12.7	2.2	2.6	10.8	11.9
20	20.0	20.3	1.2	1.9	2.2	15.6	16.5	2.3	2.7	14.6	15.7	2.8	3.2	13.6	14.7
25	25.0	25.3	1.2	2.3	2.7	19.6	20.7	2.8	3.2	18.6	19.7	3.5	4.0	17.0	18.3
32	32.0	32.3	1.3	2.9	3.3	25.4	26.5	3.6	4.1	23.8	25.1	4.4	5.0	22.0	23.5
40	40.0	40.4	1.4	3.7	4.2	31.6	33.0	4.5	5.1	29.8	31.4	5.5	6.2	27.6	29.4
50	50.0	50.5	1.4	4.6	5.2	39.6	41.3	5.6	6.3	37.4	39.3	6.9	7.7	34.6	36.7
63	63.0	63.6	1.5	5.8	6.5	50.0	52.0	7.1	8.0	47.0	49.4	8.6	9.6	43.8	46.4
75	75.0	75.7	1.6	6.8	7.6	59.8	62.1	8.4	9.4	56.2	58.9	10.3	11.5	52.0	55.1
90	90.0	90.9	1.8	8.2	9.2	71.6	74.5	10.1	11.3	67.4	70.7	12.3	13.7	62.6	66.3
110	110.0	111.0	2.2	10.0	11.1	87.8	91.0	12.3	13.7	82.6	86.4	15.1	16.8	76.4	80.8
125	125.0	126.2	2.5	11.4	12.7	99.6	103.4	14.0	15.5	94.0	98.2	17.1	19.0	87.0	92.0
140	140.0	141.3	2.8	12.7	14.1	111.8	115.9	15.7	17.4	105.2	109.9	19.2	21.3	97.4	102.9
160	160.0	161.5	3.2	14.6	16.2	127.6	132.3	17.9	19.8	120.4	125.7	21.9	24.2	111.6	117.7
180	180.0	181.7	3.6	16.4	18.2	143.6	148.9	20.1	22.3	135.4	141.5	24.6	27.2	125.6	132.5
200	200.0	201.8	4.0	18.2	20.2	159.6	165.4	22.4	24.8	150.4	157.0	27.3	30.2	139.6	147.2
225	225.0	227.1	4.5	20.5	22.7	179.6	186.1	25.1	27.8	169.4	176.9	30.8	34.0	157.0	165.5
250	250.0	252.3	5.0	22.7	25.1	199.8	206.9	27.9	30.8	188.4	196.5	34.2	37.8	174.4	183.9
280	280.0	282.6	9.8	25.4	28.1	223.8	231.8	31.3	34.6	210.8	220.0	38.3	42.3	195.4	206.0
315	315.0	317.9	11.1	28.6	31.6	251.8	260.7	35.2	38.9	237.2	247.5	43.0	47.4	220.2	231.9
355	355.0	358.2	12.5	32.2	35.6	283.8	293.8	39.6	43.7	267.6	279.0	48.5	53.5	248.0	261.2
400	400.0	403.6	14.0	36.3	40.1	319.8	331.0	44.7	49.3	301.4	314.2	54.6	60.2	279.6	294.4
450	450.0	454.1	15.6	40.9	45.1	359.8	372.3	50.2	55.4	339.2	353.7	61.5	67.8	314.4	331.1
500	500.0	504.5	17.5	45.4	50.1	399.8	413.7	55.8	61.5	377.0	392.9	67.6	74.5	351.0	369.3
560	560.0	565.0	19.6	50.8	56.0	448.0	463.4	62.5	68.9	422.2	440.0	75.7	83.4	393.2	413.6
630	630.0	635.7	22.1	57.2	63.1	503.8	521.3	70.3	77.5	475.0	495.1	85.1	93.7	442.6	465.5
710	710.0	716.4	24.9	64.5	71.1	567.8	587.4	79.3	87.4	535.2	577.8	-	-	-	-
800	800.0	807.2	28.0	72.5	80.0	640.0	662.2	89.3	98.4	603.2	628.6	-	-	-	-
900	900.0	908.1		81.7	90.0	720.0	744.7	-	-	-	-	-	-	-	-
1000	1000.0	1009.0		90.2	99.4	801.2	828.6	-	-	-	-	-	-	-	-
1200	1200.0	1210.0		-	-	-	-	-	-	-	-	-	-	-	-

*OUT OF ROUNDNESS.

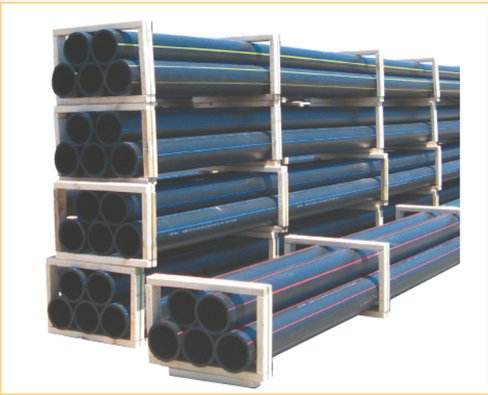

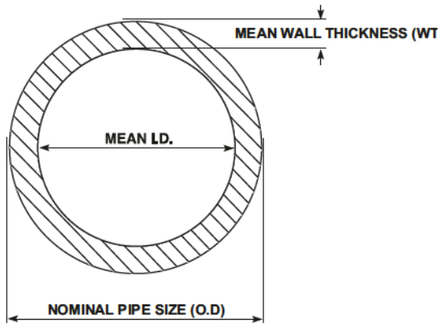

PE 100 COILED PIPE - DIMENSIONS OVERVIEW

SIZE (mm)	PN RATINGS	COIL LENGTH (m)	COIL ID (mm)	COIL OD (mm)	COIL WIDTH (mm)	COIL CAN BE NESTED INSIDE LARGER COIL OF MIN. SIZE
20	8- 25	50	630	830	100	DN50
20	8- 25	100	630	830	200	DN50
20	8- 25	200	630	890	260	DN63
20	GAS	200	880	1220	150	DN75
25	8- 25	50	630	830	170	DN50
25	8- 25	100	630	950	170	DN75
25	8- 25	200	630	990	300	DN75
32	8- 25	50	880	1120	165	DN75
32	8- 25	70	880	1180	165	DN75
32	8- 25	100	880	1180	230	DN75
32	8- 25	200	880	1280	300	DN75
40	8- 25	50	880	1110	290	DN75
40	8- 25	100	880	1250	290	DN75
40	8- 25	150	880	1380	290	DN75
50	8- 25	50	1030	1320	260	DN75
50	8- 25	100	1030	1570	260	DN90
50	8- 25	150	1030	1730	260	DN90
50	8- 25	200	1030	1820	290	DN125 100m Coils
63	12.5- 25	100	1030	1700	300	DN90
63	12.5- 25	140	1030	1700	400	DN90
63	12.5- 25	200	1030	1900	400	DN125 100m Coils
63	10	100	1250	1900	270	DN125 100m Coils
63	10	140	1250	1900	370	DN125 100m Coils
63	10	200	1250	2020	400	DN125 PN12.5 100m Coils
75	8- 25	100	1550	2080	400	DN125 PN12.5 100m Coils
90	8- 25	100	2000	2640	380	-
110	GAS	50	2700	2900	410	-
110	10- 25	100	2000	2760	470	-
110	10- 25	200	2000	3150	580	-
110	8	100	2300	3100	470	-
125	12.5- 25	100	2000	2870	530	-
125	10	100	2300	3160	470	-
140	12.5- 25	100	2300	3300	510	-
160	12.5- 25	80	2500	3350	590	-
160	12.5- 25	100	2300	3410	590	-

ACU-TECH PIPE SYSTEM PRODUCTS

Acu-Black	Acu-Gas	Acu-Air
Acu-Water	Acu-Rural	Acu-Sewer
Acu-Fire	Acu-Comms	Acu-Drain
Acu-Therm	Acu-Power	Recycle-Tech

IMPERIAL (RURAL) POLYETHYLENE PIPE

PE100 • SDR17 • 900kPa

SIZE (INCH)		OD (mm)	AVERAGE WT (mm)	COIL LENGTH (m)	COIL ID (mm)	COIl OD (mm)	COIL WIDTH (mm)	COIL WEIGHT (kg)	NOTE
1"	Red Stripe	28.9	1.8	200	1280	1590	260	30.4 (ea)	*Nested Coil
1"	White with Red Stripe	28.9	1.8	200	1280	1590	260	30.4 (ea)	*Nested Coil
1 ¼"	Red Stripe	36.0	2.2	150	1325	1650	285	35.3 (ea)	*Nested Coil
1 ¼"	White with Red Stripe	36.0	2.2	150	1325	1650	285	35.3 (ea)	*Nested Coil
1 ½"	Red Stripe	43.2	2.6	150	1580	1855	300	49.8 (ea)	*Nested Coil
1 ½"	White with Red Stripe	43.2	2.6	150	1580	1855	300	49.8 (ea)	*Nested Coil
1 ½"	Red Stripe	43.2	2.6	300	865	1540	430	99.6	
1 ½"	White with Red Stripe	43.2	2.6	300	865	1540	430	99.6	
2"	Red Stripe	57.6	3.4	100	1600	2010	335	58.2 (ea)	*Nested Coil
2"	White with Red Stripe	57.6	3.4	100	1600	2010	335	58.2 (ea)	*Nested Coil
2"	Red Stripe	57.6	3.4	200	1600	2110	370	116.5	
2"	White with Red Stripe	57.6	3.4	200	1600	2110	370	116.5	

Note: Selected coils are supplied as 'nested' and must be ordered in multiples of 2.
One coil will be strapped inside the other.

STRIPING AND COLOUR CODING GUIDE

Black Pipe (with no stripes):
May be used for all applications except for fuel gases

Black Pipe with Blue stripes:
Drinking water/potable water

Black Pipe with Yellow stripes ***or*** Full Yellow Jacket:
Fuel gases, process gases, liquified gases under pressure

Black Pipe with Red stripes:
Dedicated water for fire extinguishing supply lines

Full White Jacket:
Communications conduit

Black Pipe with Lilac/Purple stripes:
Recycled or reclaimed water

Full Orange Jacket:
Electrical conduit

Full White Jacket:
Above ground co-ex pipelines

Black Pipe with Cream stripes:
Sewer pipes

Black Pipe with Red/Brown stripes:
Rural imperial-size low-pressure pipe

BUTT WELD AND FABRICATED FITTINGS

Our extensive range of fabricated fittings includes sweep bends, junctions, true Y pieces, equal and reducing tees, and segmented bends ranging in size from 25mm - 800mm.

For more detailed information on fabricated items such as spools, manifolds, tanks and flanged pipe turn to page 88.

Call us now for more information on 1300 270 270.

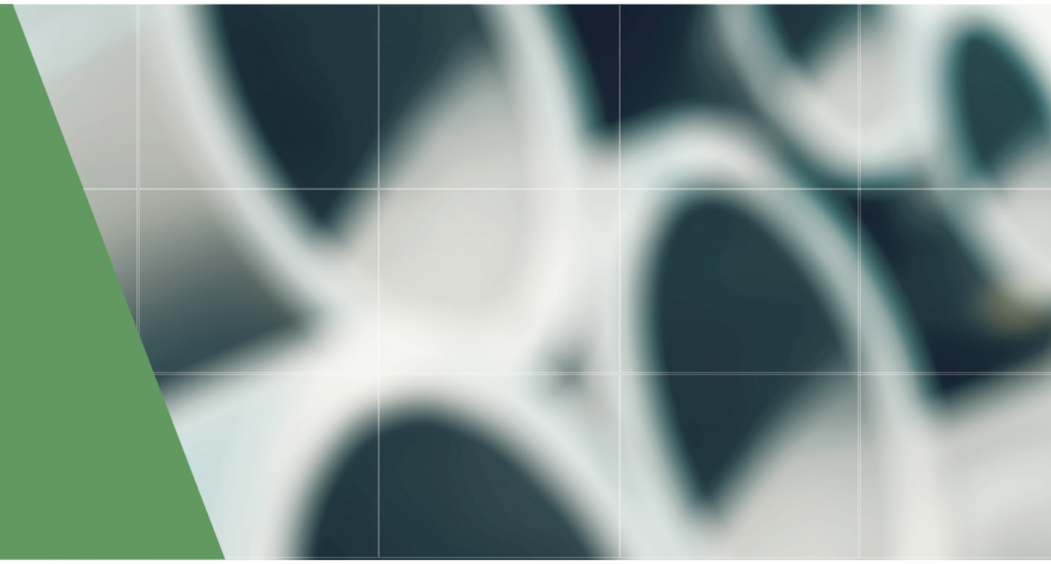

90° Sweep Bend 22
60° Sweep Bend 23
45° Sweep Bend 24
30° Sweep Bend 25
15° Sweep Bend 26
90° Segmented Bend 27
45° Segmented Bend 28
90° Short Radius Bend 29
Fabricated Reducing Tee 30-31
Fabricated Equal Tee 32
Fabricated True Y Junction 33
Fabricated 45° Junction 34
Short Spigot Eccentric Reducer 35
Short Spigot Concentric Reducer 36-37
Short Spigot End Cap 38
Shouldered End 39
Custom and Specilised Fittings 40-41

90° SWEEP BEND (6754 / 6756)

PE100 • SDR11 • SDR17

SIZE (mm)	CODE SDR11 (6754)	CODE SDR17 (6756)	A (mm)	B (mm)	R (mm)
20	67540020	67560020	200	100	100
25	67540025	67560025	200	100	100
32	67540032	67560032	228	100	128
40	67540040	67560040	260	100	160
50	67540050	67560050	275	100	175
63	67540063	67560063	325	100	225
75	67540075	67560075	455	150	305
90	67540090	67560090	455	150	305
110	67540110	67560110	560	180	380
125	67540125	67560125	560	180	380
140	67540140	67560140	660	200	460
160	67540160	67560160	660	200	460
180	67540180	67560180	785	250	535
200	67540200	67560200	785	250	535
225	67540225	67560225	785	250	535
250	67540250	67560250	915	300	615
280	67540280	67560280	965	350	615
315	67540315	67560315	1115	400	715
355	67540355	67560355	1280	500	780
400	67540400	67560400	1620	550	1070
450	67540450	67560450	1650	550	1100
500	67540500	67560500	1950	700	1250
560	67540560	67560560	1982	700	1250
630	67540630	67560630	2015	700	1282
710	67540710	67560710	2700	900	1800
800	67540800	67560800	3000	900	2100

Note 1: This fitting is suitable for butt weld only and will need to be extended for electrofusion.
Note 2: Angle tolerance (+), (-) 5°.

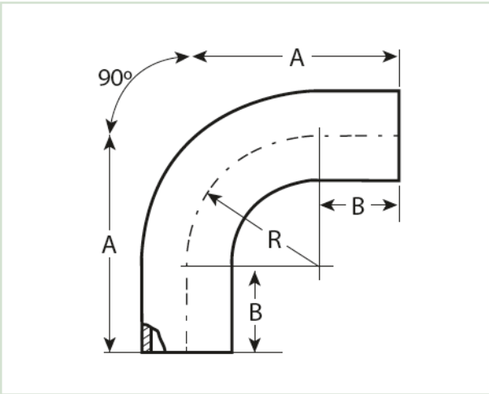

60° SWEEP BEND (6764 / 6766)

PE100 • SDR11 • SDR17

SIZE (mm)	CODE SDR11 (6764)	CODE SDR17 (6766)	A (mm)	B (mm)	R (mm)
20	67640020	67660020	155	100	100
25	67640025	67660025	155	100	100
32	67640032	67660032	170	100	128
40	67640040	67660040	190	100	160
50	67640050	67660050	200	100	175
63	67640063	67660063	230	100	225
75	67640075	67660075	320	150	305
90	67640090	67660090	320	150	305
110	67640110	67660110	400	180	380
125	67640125	67660125	400	180	380
140	67640140	67660140	465	200	460
160	67640160	67660160	465	200	460
180	67640180	67660180	560	250	535
200	67640200	67660200	560	250	535
225	67640225	67660225	560	250	535
250	67640250	67660250	655	300	615
280	67640280	67660280	705	350	615
315	67640315	67660315	810	400	715
355	67640355	67660355	950	500	780
400	67640400	67660400	1160	550	1070
450	67640450	67660450	1185	550	1100
500	67640500	67660500	1420	700	1250
560	67640560	67660560	1440	700	1282
630	67640630	67660630	1460	700	1315
710	67640710	67660710	1800	900	1562
800	67640800	67660800	1968	900	1850

Note 1: This fitting is suitable for butt weld only and will need to be extended for electrofusion.
Note 2: Angle tolerance (+), (-) 5°.

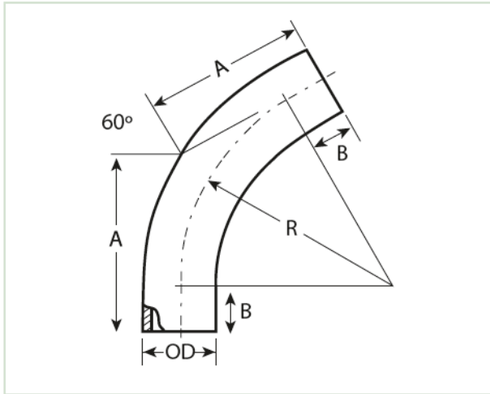

45° SWEEP BEND (6774 / 6776)

PE100 • SDR11 • SDR17

SIZE (mm)	CODE SDR11 (6774)	CODE SDR17 (6776)	A (mm)	B (mm)	R (mm)
20	67740020	67760020	140	100	100
25	67740025	67760025	140	100	100
32	67740032	67760032	150	100	128
40	67740040	67760040	165	100	160
50	67740050	67760050	170	100	175
63	67740063	67760063	190	100	225
75	67740075	67760075	270	150	305
90	67740090	67760090	270	150	305
110	67740110	67760110	340	180	380
125	67740125	67760125	340	180	380
140	67740140	67760140	390	200	460
160	67740160	67760160	390	200	460
180	67740180	67760180	470	250	535
200	67740200	67760200	470	250	535
225	67740225	67760225	470	250	535
250	67740250	67760250	550	300	615
280	67740280	67760280	605	350	615
315	67740315	67760315	695	400	715
355	67740355	67760355	820	500	780
400	67740400	67760400	990	550	1070
450	67740450	67760450	1005	550	1100
500	67740500	67760500	1215	700	1250
560	67740560	67760560	1230	700	1282
630	67740630	67760630	1245	700	1315
710	67740710	67760710	1687	900	1900
800	67740800	67760800	1770	900	2100

Note 1: This fitting is suitable for butt weld only and will need to be extended for electrofusion.
Note 2: Angle tolerance (+), (-) 5°.

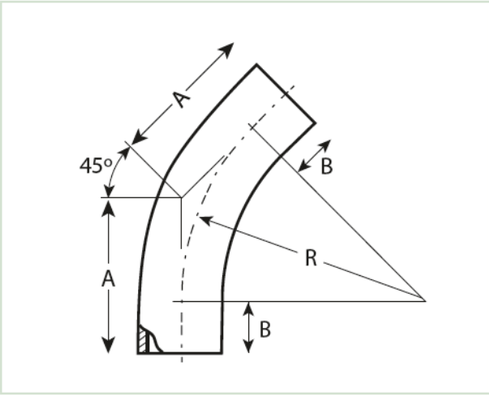

30° SWEEP BEND (6784 / 6786)

PE100 • SDR11 • SDR17

SIZE (mm)	CODE SDR11 (6784)	CODE SDR17 (6786)	A (mm)	B (mm)	R (mm)
20	67840020	67860020	130	100	100
25	67840025	67860025	130	100	100
32	67840032	67860032	134	100	128
40	67840040	67860040	140	100	160
50	67840050	67860050	146	100	175
63	67840063	67860063	160	100	225
75	67840075	67860075	230	150	305
90	67840090	67860090	230	150	305
110	67840110	67860110	280	180	380
125	67840125	67860125	280	180	380
140	67840140	67860140	320	200	460
160	67840160	67860160	320	200	460
180	67840180	67860180	320	250	535
200	67840200	67860200	320	250	535
225	67840225	67860225	400	250	535
250	67840250	67860250	460	300	615
280	67840280	67860280	510	350	615
315	67840315	67860315	605	400	715
355	67840355	67860355	710	500	780
400	67840400	67860400	830	550	1070
450	67840450	67860450	840	550	1100
500	67840500	67860550	1030	700	1250
560	67840560	67860560	1040	700	1282
630	67840630	67860630	1050	700	1315
710	67840710	67860710	1318	900	1562
800	67840800	67860800	1372	900	1760

Note 1: This fitting is suitable for butt weld only and will need to be extended for electrofusion.
Note 2: Angle tolerance (+), (-) 5°.

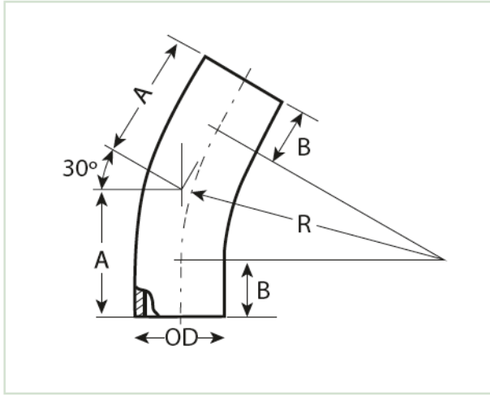

15° SWEEP BEND (6794 / 6796)

PE100 • SDR11 • SDR17

SIZE (mm)	CODE SDR11 (6794)	CODE SDR17 (6796)	A (mm)	B (mm)	R (mm)
20	67940020	67960020	130	100	100
25	67940025	67960025	130	100	100
32	67940032	67960032	134	100	128
40	67940040	67960040	140	100	160
50	67940050	67960050	146	100	175
63	67940063	67960063	160	100	225
75	67940075	67960075	230	150	305
90	67940090	67960090	230	150	305
110	67940110	67960110	280	180	380
125	67940125	67960125	280	180	380
140	67940140	67960140	320	200	460
160	67940160	67960160	320	200	460
180	67940180	67960180	320	250	535
200	67940200	67960200	320	250	535
225	67940225	67960225	400	250	535
250	67940250	67960250	460	300	615
280	67940280	67960280	510	350	615
315	67940315	67960315	605	400	715
355	67940355	67960355	710	500	780
400	67940400	67960400	830	550	1070
450	67940450	67960450	840	550	1100
500	67940500	67960500	1030	700	1250
560	67940560	67960560	1040	700	1282
630	67940630	67960630	1050	700	1315
710	67940710	67960710	1105	900	1562
800	67940800	67940800	1132	900	1760

Note 1: This fitting is suitable for butt weld only and will need to be extended for electrofusion.
Note 2: Angle tolerance (+), (-) 5°.

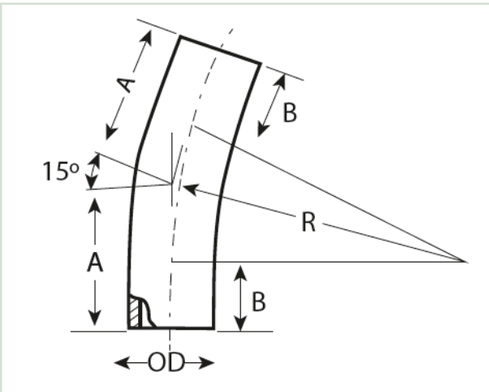

90° SEGMENTED BEND (6824 / 6826)

PE100 • SDR11 • SDR17

SIZE (mm)	CODE SDR11 (6824)	CODE SDR17 (6826)	A (mm)	B (mm)	R (mm)
90	68240090	68260090	235	100	135
110	68240110	68260110	265	100	165
125	68240125	68260125	338	150	188
140	68240140	68260140	360	150	210
160	68240160	68260160	390	150	240
180	68240180	68260180	425	150	270
200	68240200	68260200	450	150	300
225	68240225	68260225	488	150	338
250	68240250	68260250	625	250	375
280	68240280	68260280	670	250	420
315	68240315	68260315	777	300	477
355	68240355	68260355	833	300	533
400	68240400	68260400	900	300	600
450	68240450	68260450	975	300	675
500	68240500	68260500	1100	350	750
560	68240560	68260560	1190	350	840
630	68240630	68260630	1295	350	945
710	68240710	68260710	1415	350	1065
800	68240800	68260800	1550	350	1200
900	68240900	68260900	1750	400	1350
1000	68241000	68261000	1900	400	1500
1200	68241200	68261200	2800	400	1800

Note 1: Pressure re-rating applies. Contact Acu-Tech for more information.

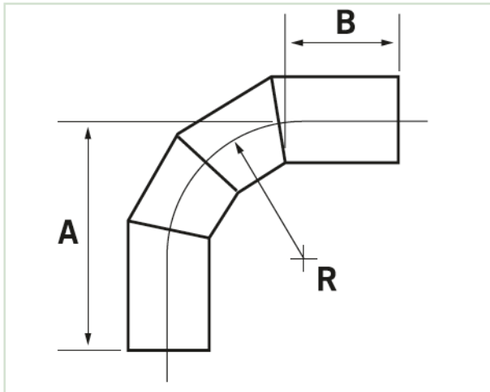

45° SEGMENTED BEND (6844 / 6846)

PE100 • SDR11 • SDR17

SIZE (mm)	CODE SDR11 (6844)	CODE SDR17 (6846)	A (mm)	B (mm)	R (mm)
90	68440090	68460090	156	100	135
110	68440110	68460110	168	100	165
125	68440125	68460125	227	150	188
140	68440140	68460140	237	150	210
160	68440160	68460160	249	150	240
180	68440180	68460180	261	150	270
200	68440200	68460200	274	150	300
225	68440225	68460225	290	150	338
250	68440250	68460250	412	250	375
280	68440280	68460280	474	250	420
315	68440315	68460315	498	300	477
355	68440355	68460355	520	300	533
400	68440400	68460400	548	300	600
450	68440450	68460450	580	300	675
500	68440500	68460500	665	350	750
560	68440560	68460560	698	350	840
630	68440630	68460630	741	350	945
710	68440710	68460710	791	350	1065
800	68440800	68460800	847	350	1200
900	68440900	68460900	940	400	1350
1000	68441000	68461000	1000	400	1500
1200	68441200	68461200	1120	400	1800

Note 1: Pressure re-rating applies. Contact Acu-Tech for more information.

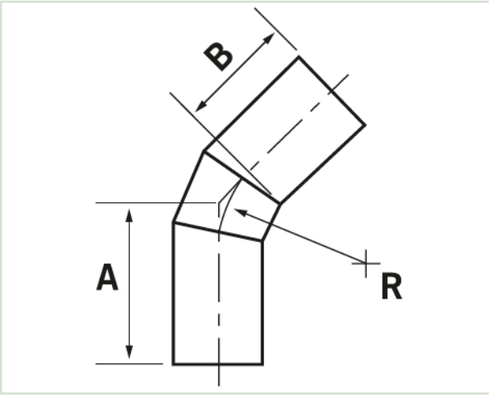

SHORT RADIUS 90° BEND (4054 / 4056)

PE100 • SDR11 • SDR17

SIZE (mm)	CODE SDR11 (4054)	CODE SDR17 (4056)	Z (mm)	R (mm)
63	40540063	40560063	66	63
75	40540075	40560075	78	75
90	40540090	40560090	93	90
110	40540110	40560110	115	110
125	40540125	40560125	130	125
140	40540140	40560140	145	140
160	40540160	40560160	167	160
180	40540180	40560180	200	180
200	40540200	40560200	207	200
225	40540225	40560225	232	225
250	40540250	40560250	257	285
280	40540280	40560280	287	287
315	40540315	40560315	322	322
355	40540355	40560355	380	380
400	40540400	40560400	425	425
450	40540450	40560450	450	450
500	40540500	40560500	450	450

Note: For butt weld only. Can be extended for electrofusion.

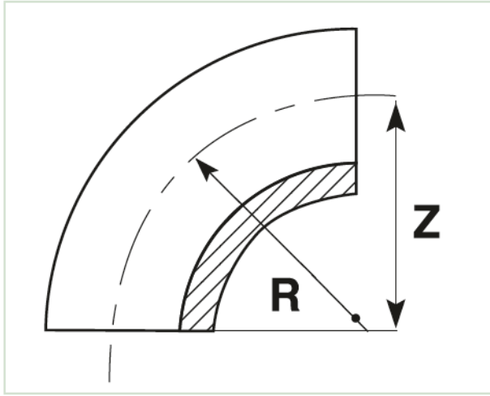

FABRICATED REDUCING TEE (6164 / 6166)

PE100 • SDR11 • SDR17

CODE SDR11 (6164)	CODE SDR17 (6166)	OD 1 (mm)	OD 2 (mm)	A (mm)	B (mm)
61642090	61662090	200	90	600	550
61642011	61662011	200	110	600	550
61642290	61662290	225	90	600	550
61642211	61662211	225	110	600	550
61642590	61662590	250	90	600	650
61642511	61662511	250	110	600	650
61642516	61662516	250	160	600	650
61642890	61662890	280	90	600	650
61642811	61662811	280	110	600	650
61642816	61662816	280	160	600	650
61642820	61662820	280	200	600	650
61643190	61663190	315	90	600	700
61643111	61663111	315	110	600	700
61643116	61663116	315	160	650	700
61643120	61663120	315	200	650	700
61643590	61663590	355	90	650	700
61643511	61663511	355	110	650	700
61643516	61663516	355	160	650	700
61643520	61663520	355	200	700	700
61643522	61663522	355	225	700	700
61643525	61663525	355	250	700	700
61644090	61664090	400	90	800	750
61644011	61664011	400	110	800	750
61644016	61664016	400	160	800	750
61644020	61664020	400	200	900	750
61644022	61664022	400	225	900	750
61644025	61664025	400	250	900	750
61644028	61664028	400	280	900	750
61644590	61664590	450	90	900	750
61644511	61664511	450	110	900	750
61644516	61664516	450	160	900	750
61644520	61664520	450	200	1000	750
61644522	61664522	450	225	1000	750
61644525	61664525	450	250	1000	800
61644528	61664528	450	280	1000	800
61644531	61664531	450	315	1000	800
61645016	61665016	500	160	1000	800
61645020	61665020	500	200	1000	800
61645022	61665022	500	225	1000	800
61645025	61665025	500	250	1000	900
61645028	61665028	500	280	1000	900
61645031	61665031	500	315	1000	900
61645035	61665035	500	355	1000	900

Note 1: Pressure re-rating applies. Contact Acu-Tech for more information.

Note 2: Standard fitting suitable for butt weld only. Can be modified to suit electrofusion if required, please contact us for more information.

Note 3: Fully rated tees available on request.

FABRICATED REDUCING TEE (6164 / 6166) Cont'd

PE100 • SDR11 • SDR17

CODE SDR11 (6164)	CODE SDR17 (6166)	OD 1 (mm)	OD 2 (mm)	A (mm)	B (mm)
61645620	61665620	560	200	1000	900
61645622	61665622	560	225	1000	900
61645625	61665625	560	250	1000	900
61645628	61665628	560	280	1000	1200
61645631	61665631	560	315	1000	1200
61645635	61665635	560	355	1000	1200
61646320	61666320	630	200	1000	1200
61646322	61666322	630	225	1000	1200
61646325	61666325	630	250	1000	1200
61646328	61666328	630	280	1000	1200
61646331	61666331	630	315	1100	1200
61646335	61666335	630	355	1100	1200
61646340	61666340	630	400	1200	1200
61646345	61666345	630	450	1200	1200
61647120	61667120	710	200	1000	855
61647122	61667122	710	225	1025	855
61647125	61667125	710	250	1050	855
61647128	61667128	710	280	1080	855
61647131	61667131	710	315	1115	855
61647135	61667135	710	355	1135	855
61647140	61667140	710	400	1200	1255
61647145	61667145	710	450	1250	1255
61648025	61668025	800	250	1050	900
61648028	61668028	800	280	1080	900
61648031	61668031	800	315	1115	900
61648035	61668035	800	355	1135	900
61648040	61668040	800	400	1200	1300
61648045	61668045	800	450	1250	1300
61648050	61668050	800	500	1300	1300

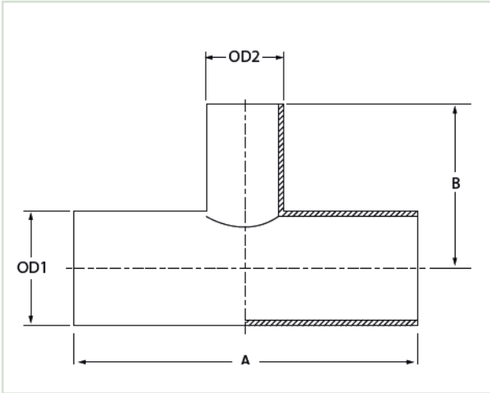

FABRICATED EQUAL TEE (6154 / 6156)

PE100 • SDR11 • SDR17

CODE SDR11 (6154)	CODE SDR17 (6156)	OD (mm)	A (mm)	B (mm)
61540090	61560090	90	400	200
61540110	61560110	110	500	250
61540125	61560125	125	500	250
61540140	61560140	140	500	500
61540160	61560160	160	600	500
61540200	61560200	200	650	500
61540225	61560225	225	650	550
61540250	61560250	250	700	650
61540280	61560280	280	700	650
61540315	61560315	315	800	700
61540355	61560355	355	800	700
61540400	61560400	400	1000	1100
61540450	61560450	450	1100	1100
61540500	61560500	500	1200	1200
61540560	61560560	560	1200	1200
61540630	61560630	630	1200	1200
61540710	61560710	710	1500	1700
61540800	61560800	800	1600	1700
61541000	61561000	1000	1800	1700
61541200	61661200	1200	2400	1900

Note: Pressure re-rating applies. Contact Acu-Tech for more information.

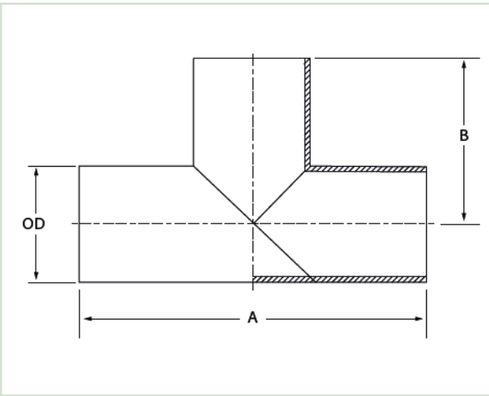

FABRICATED TRUE Y JUNCTION (6704 / 6706)

PE100 • SDR11 • SDR17

SIZE (mm)	CODE SDR11 (6704)	CODE SDR17 (6706)	A (mm)	B (mm)
90	67040090	67060090	200	450
110	67040110	67060110	250	450
125	67040125	67060125	250	450
140	67040140	67060140	500	600
160	67040160	67060160	500	600
180	67040180	67060180	500	750
200	67040200	67060200	500	750
225	67040225	67060225	550	750
250	67040250	67060250	650	900
280	67040280	67060280	650	900
315	67040315	67060315	700	1050
355	67040355	67060355	700	1180
400	67040400	67060400	1100	1250
450	67040450	67060450	1100	1300
500	67040500	67060500	1200	1400
560	67040560	67060560	1200	1400
630	67040630	67060630	1200	1440
710	67040710	67060710	1550	1550
800	67040800	67060800	1600	1600
900	67040900	67060900	1600	1600
1000	67041000	67061000	1650	1650
1200	67041200	67061200	1700	1700

Note: Pressure re-rating applies. Contact Acu-Tech for more information.

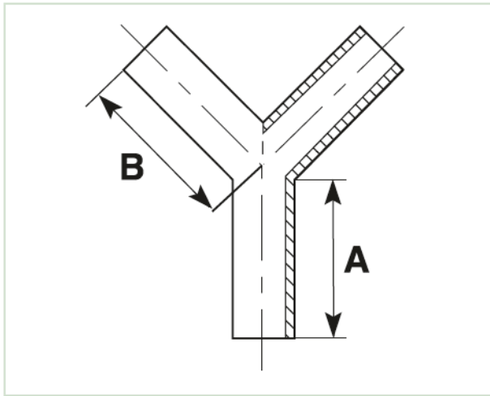

FABRICATED 45° JUNCTION (6694 / 6696)

PE100 • SDR11 • SDR17

SIZE (mm)	CODE SDR11 (6694)	CODE SDR17 (6696)	A (mm)	B (mm)	C (mm)
90	66940090	66960090	700	270	430
110	66940110	66960110	700	270	430
125	66940125	66960125	750	300	450
140	66940140	66960140	780	300	480
160	66940160	66960160	850	330	520
180	66940180	66960180	950	360	590
200	66940200	66960200	960	370	590
225	66940225	66960225	1080	420	660
250	66940250	66960250	1150	450	710
280	66940280	66960280	1250	500	750
315	66940315	66960315	1350	530	820
355	66940355	66960355	1450	570	880
400	66940400	66960400	1550	600	950
450	66940450	66960450	1850	650	1200
500	66940500	66960500	2100	700	1400
560	66940560	66960560	2200	800	1400
630	66940630	66960630	2300	800	1500
710	66940710	66960710	2600	900	1700
800	66940800	66960800	2800	1000	1800
900	66940900	66960900	3100	1000	2100
1000	66941000	66961000	3300	1100	2200
1200	66941200	66961200	3600	1200	2400

Note 1: Pressure re-rating applies. Contact Acu-Tech for more information.
Note 2: Fully pressure rated injection moulded junctions available on request.

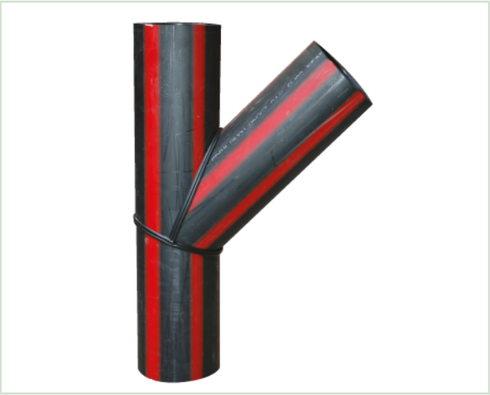

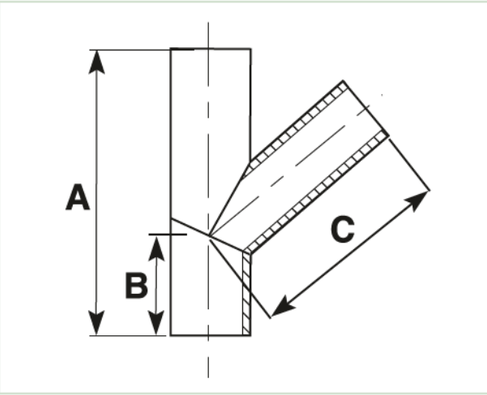

SHORT SPIGOT ECCENTRIC REDUCER (4044 / 4046)

PE100 • SDR11 • SDR17

D (mm)	D1 (mm)	CODE SDR11 (4044)	CODE SDR17 (4046)	L (mm)
160	90	40441690	40461690	140
160	110	40441611	40461611	120
160	125	40441612	40461612	110
160	140	40441614	40461614	100
180	110	40441811	40461811	140
180	125	40441812	40461812	130
180	140	40441814	40461814	120
180	160	40441816	40461816	100
200	125	40442012	40462012	150
200	140	40442014	40462014	130
200	160	40442016	40462016	120
200	180	40442018	40462018	100
225	140	40442214	40462214	160
225	160	40442216	40462216	140
225	180	40442218	40462218	120
225	200	40442220	40462220	110
250	160	40442516	40462516	170
250	180	40442518	40462518	150
250	200	40442520	40462520	130
250	225	40442522	40462522	110
280	180	40442818	40462818	180
280	200	40442820	40462820	160
280	225	40442822	40462822	140
280	250	40442825	40462825	120
315	200	40443120	40463120	190
315	225	40443122	40463122	170
315	250	40443125	40463125	150
315	280	40443128	40463128	130

D (mm)	D1 (mm)	CODE SDR11 (4044)	CODE SDR17 (4046)	L (mm)
355	225	40443522	40463522	210
355	250	40443525	40463525	190
355	280	40443528	40463528	150
355	315	40443531	40463531	130
400	250	40444025	40464025	230
400	280	40444028	40464028	200
400	315	40444031	40464031	170
400	355	40444035	40464035	140
450	280	40444528	40464528	250
450	315	40444531	40464531	220
450	355	40444535	40464535	190
450	400	40444540	40464540	150
500	280	40445028	40465028	290
500	315	40445031	40465031	260
500	355	40445035	40465035	230
500	400	40445040	40465040	200
500	450	40445045	40465045	160
560	400	40445640	40465640	250
560	450	40445645	40465645	210
560	500	40445650	40465650	170
630	450	40446345	40466345	270
630	500	40446350	40466350	230
630	560	40446356	40466356	180
710	560	-	40467156	240
710	630	-	40467163	180
800	630	-	40468063	270
800	710	-	40468071	190
900	710	-	40469071	280
900	800	-	40469080	210

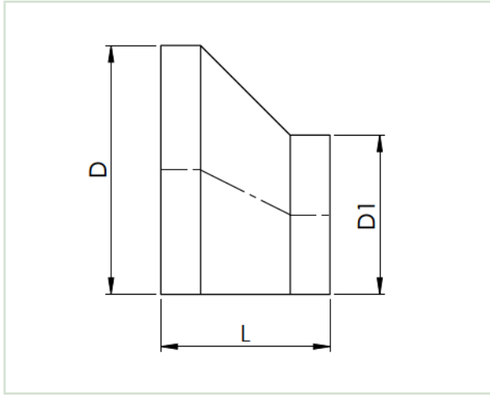

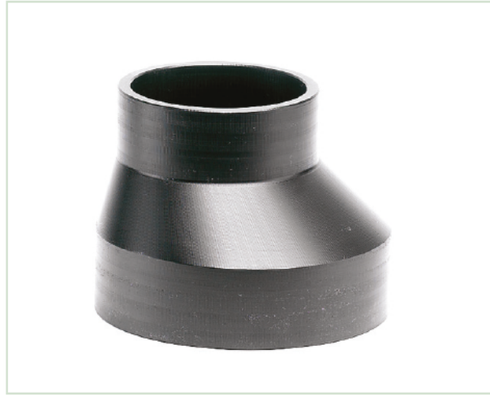

SHORT SPIGOT CONCENTRIC REDUCER (4034 / 4036)

PE100 • SDR11 • SDR17

SIZE (mm)	CODE SDR11 (4034)	CODE SDR17 (4036)	L (mm)
63 x 50	40346350	40366350	60
75 x 50	40347550	40367550	70
75 x 63	40347563	40367563	85
90 x 50	40349050	40369050	75
90 x 63	40349063	40369063	75
90 x 75	40349075	40369075	75
110 x 50	40341150	40361150	90
110 x 63	40341163	40361163	105
110 x 75	40341175	40361175	95
110 x 90	40341190	40361190	100
125 x 63	40341263	40361263	120
125 x 75	40341275	40361275	100
125 x 90	40341290	40361290	110
125 x 110	40341211	40361211	102
140 x 63	40341463	40361463	110
140 x 75	40341475	40361475	110
140 x 90	40341490	40361490	110
140 x 110	40341411	40361411	110
140 x 125	40341412	40361412	110
160 x 63	40341663	40361663	120
160 x 75	40341675	40361675	120
160 x 90	40341690	40361690	140
160 x 110	40341611	40361611	128
160 x 125	40341612	40361612	122
160 x 140	40341614	40361614	120
180 x 63	40341863	40361863	120
180 x 75	40341875	40361875	120

SIZE (mm)	CODE SDR11 (4034)	CODE SDR17 (4036)	L (mm)
180 x 90	40341890	40361890	143
180 x 110	40341811	40361811	130
180 x 125	40341812	40361812	143
180 x 160	40341816	40361816	130
200 x 63	40342063	40362063	120
200 x 75	40342075	40362075	120
200 x 90	40342090	40362090	120
200 x 110	40342011	40362011	120
200 x 125	40342012	40362012	120
200 x 160	40342016	40362016	120
200 x 140	40342014	40362014	120
200 x 180	40342018	40362018	120
225 x 90	40342290	40362290	120
225 x 110	40342211	40362211	120
225 x 125	40342212	40362212	120
225 x 140	40342214	40362214	115
225 x 160	40342216	40362216	115
225 x 180	40342218	40362218	115
225 x 200	40342220	40362220	115
250 x 90	40342590	40362590	120
250 x 110	40342511	40362511	120
250 x 125	40342512	40362512	120
250 x 140	40342514	40362514	115
250 x 160	40342516	40362516	115
250 x 180	40342518	40362518	115
250 x 200	40342520	40362520	115
250 x 225	40342522	40362522	115

Note: Sizes available up to 1200mm.

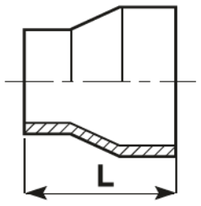

SHORT SPIGOT CONCENTRIC REDUCER (4034 / 4036) Cont'd

PE100 • SDR11 • SDR17

SIZE (mm)	CODE SDR11 (4034)	CODE SDR17 (4036)	L (mm)
280 x 90	40342890	40362890	120
280 x 110	40342811	40362811	120
280 x 125	40342812	40362812	120
280 x 140	40342814	40362814	115
280 x 160	40342816	40362816	115
280 x 180	40342818	40362818	115
280 x 200	40342820	40362820	115
280 x 225	40342822	40362822	115
280 x 250	40342825	40362825	115
315 x 90	40343190	40363190	120
315 x 110	40343111	40363111	120
315 x 125	40343112	40363112	120
315 x 140	40343114	40363114	120
315 x 160	40343116	40363116	120
315 x 180	40343118	40363118	120
315 x 200	40343120	40363120	120
315 x 225	40343122	40363122	120
315 x 250	40343125	40363125	120
315 x 280	40343128	40363128	120
355 x 90	40343590	40363590	120
355 x 110	40343511	40363511	120
355 x 125	40343512	40363512	120
355 x 140	40343514	40363514	120
355 x 160	40343516	40363516	120
355 x 180	40343518	40363518	120
355 x 200	40343520	40363520	120
355 x 225	40343522	40363522	120
355 x 250	40343525	40363525	120
355 x 280	40343528	40363528	120

SIZE (mm)	CODE SDR11 (4034)	CODE SDR17 (4036)	L (mm)
355 x 315	40343531	40363531	120
400 x 90	40344090	40364090	125
400 x 110	40344011	40364011	125
400 x 125	40344012	40364012	125
400 x 140	40344014	40364014	125
400 x 160	40344016	40364016	125
400 x 180	40344018	40364018	125
400 x 200	40344020	40364020	125
400 x 225	40344022	40364022	125
400 x 250	40344025	40364025	125
400 x 280	40344028	40364028	125
400 x 315	40344031	40364031	125
400 x 355	40344035	40364035	125
450 x 160	40344516	40364516	125
450 x 180	40344518	40364518	125
450 x 200	40344520	40364520	125
450 x 225	40344522	40364522	125
450 x 250	40344525	40364525	125
450 x 280	40344528	40364528	125
450 x 315	40344531	40364531	125
450 x 355	40344535	40364535	125
500 x 200	40345020	40365020	125
500 x 225	40345022	40365022	125
500 x 250	40345025	40365025	125
500 x 280	40345028	40365028	125
500 x 315	40345031	40365031	125
500 x 355	40345035	40365035	125
500 x 400	40345040	40365040	125
500 x 450	40345045	40365045	125

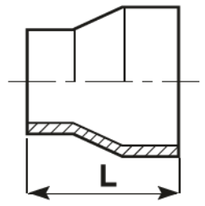

SHORT SPIGOT END CAP (4274 / 4276)

PE100 • SDR11 • SDR17

SIZE (mm)	CODE SDR11 (4274)	CODE SDR17 (4276)	L (mm)
125	42740125	42760125	35
140	42740140	42760140	35
160	42740160	42760160	40
180	42740180	42760180	45
200	42740200	42760200	45
225	42740225	42760225	50
250	42740250	42760250	55
280	42740280	42760280	60
315	42740315	42760315	65
355	42740355	42760355	70
400	42740400	42760400	75
450	42740450	42760450	85
500	42740500	42760500	90
560	42740560	42760560	100
630	42740630	42760630	110
710	42740710	42760710	120
800	42740800	42760800	130
900	42740900	42760900	140

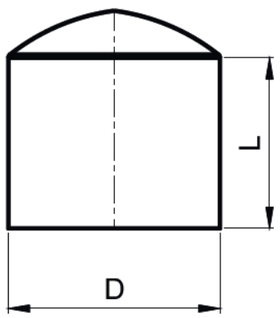

SHOULDERED END (4724 / 4726)

PE100 • SDR11 • SDR17

SIZE (mm)	CODE SDR11 (4724)	CODE SDR17 (4726)	OD (mm)	L (mm)
63	47240063	47260063	66.5	70
90	47240090	47260090	97	60
110	47240110	47260110	112	60
125	47240125	47260125	174.5	65
160	47240160	47260160	174.5	65
180	47240180	47260180	232	65
200	47240200	47260200	232	75
225	47240225	47260225	232	87
250	47240250	47260250	286	80
280	47240280	47260280	336.5	85
315	47240315	47260315	336.5	85
355	47240355	47260355	368.5	85
400	47240400	47260400	470	100
450	47240450	47260450	470	100

Note: Other sizes and SDR's are available on request.

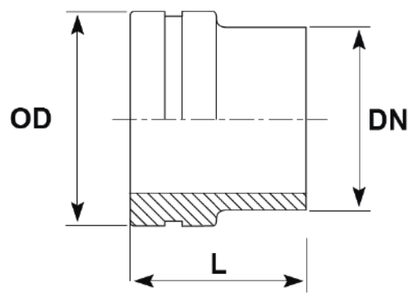

Acu-Tech offers custom and specialised fittings including fully pressure rated tees, junctions and flanges machined from solid and hollow bar.

Perforated Pipe

Cross

Puddle Flange

Hardback Bend

CUSTOM & SPECIALISED FITTINGS

Short Spigot Reducing Tees

Long Spigot Equal Tees

Invert Reducing Tees

45° Spigot Y Junction Tees

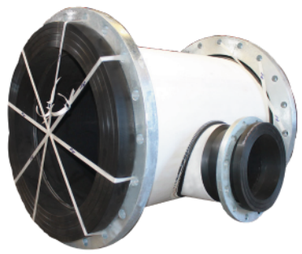

Scour Tees

FLANGES, BACKING RINGS & GASKETS

Acu-Tech offers the complete package of PE stub flanges, galvanised or stainless steel backing rings, and packaged bolt sets. We also offer flange gaskets in a range of materials including fibre, rubber and the revolutionary Steel-Core rubber profile. Backing rings in AS4087, DIN, Table F and H patterns are available to order.

Please call our sales team on 1300 270 270 for further information.

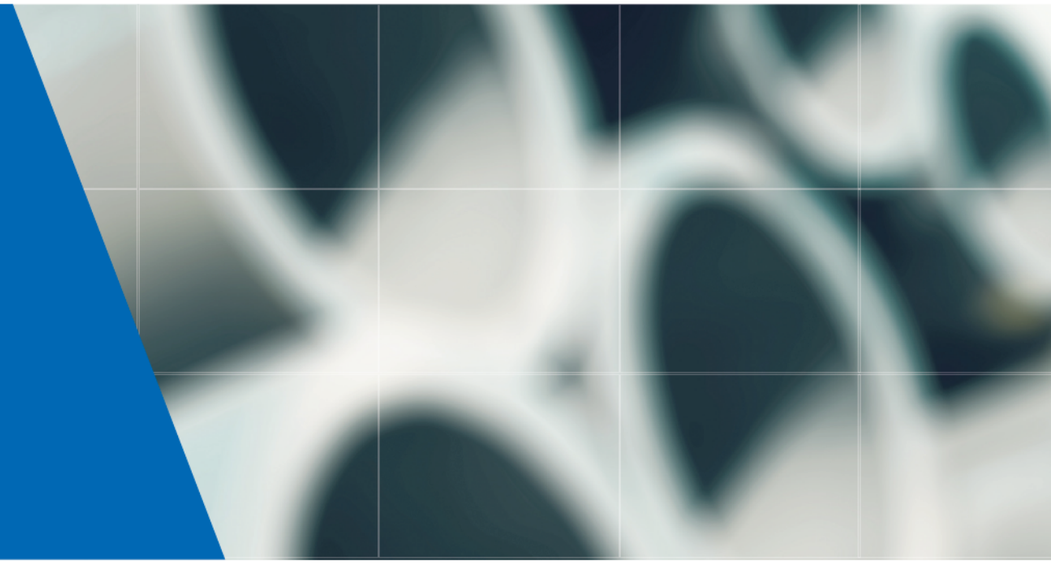

Butt Weld Stub Flange 44
Long Spigot Stub Flange 45
Max Flange 46
Blind Flange 47
Table D Backing Ring 48
Table E Backing Ring 49
Table ANSI 150 Backing Ring 50-51
DCI Female Threaded Tapping Band 52-53
EPDM Flange Gasket 54
Fibre Flange Gasket 55
Steel Core Flange Gasket 56-57
Butterfly Value Spacer 58
Bolt Sets 59

BUTT WELD STUB FLANGE (4414 / 4416)

PE100 • SDR11 • SDR17

SIZE (mm)	CODE SDR11 (4414)	CODE SDR17 (4416)	D1 (mm)	D2 (mm)	L (mm)	T (mm)
63	44140063	44160063	74	95	50	14
75	44140075	44160075	88	108	50	16
90	44140090	44160090	103	129	60	20
110	44140110	44160110	124	160	60	20
125	44140125	44160125	132	160	65	25
140	44140140	44160140	154	192	65	25
160	44140160	44160160	168	213	65	25
180	44140180	44160180	185	213	65	30
200	44140200	44160200	225	270	75	30
225	44140225	44160225	230	270	80	30
250	44140250	44160250	284	334	80	35
280	44140280	44160280	290	334	85	35
315	44140315	44160315	335	380	90	40
355	44140355	44160355	366	444	100	40
400	44140400	44160400	420	495	100	45
450	44140450	44160450	466	545	110	55
500	44140500	44160500	520	596	125	60
560	44140560	44160560	582	657	130	60
630	44140630	44160630	650	710	130	60
710	44140710	44160710	735	800	130	70/65
800	44140800	44160800	825	940	130	80
900	44140900	44160900	944	1050	170	93
1000	44141000	44161000	1052	1125	183	113

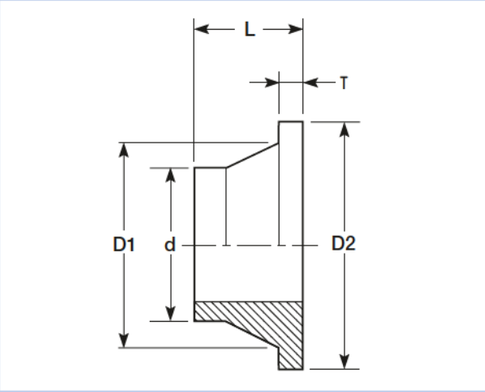

LONG SPIGOT STUB FLANGE (3414 / 3416)

PE100 • SDR11 • SDR17

SIZE (mm)	CODE SDR11 (3414)	CODE SDR17 (3416)	A (mm)	B (mm)	L (mm)	T (mm)
20	34140020	-	50	66	46	7
25	34140025	-	58	91	45	9
32	34140032	-	68	88	60	10
40	34140040	-	78	100	60	12
50	34140050	-	87	100	65	13
63	34140063	34160063	102	117	63	14
75	34140075	34160075	122	127	85	16
90	34140090	34160090	138	136	79	17
110	34140110	34160110	158	136	82	18
125	34140125	34160125	158	179	92	25
140	34140140	34160140	188	288	103	25
160	34140160	34160160	212	179	98	25
180	34140180	34160180	212	175	106	30
200	34140200	34160200	268	179	115	32
225	34140225	34160225	268	179	125	32
250	34140250	34160250	320	284	180	32
280	34140280	34160280	320	245	156	35
315	34140315	34160315	370	270	185	35
355	34140355	34160355	430	280	172	30
400	34140400	34160400	482	220	195	33
450	34140450	34160450	585	326- 340	220	60
500	34140500	34160500	585	330- 344	234	60
560	34140560	34160560	685	370- 380	260	60
630	34140630	34160630	685	360- 375	270	65

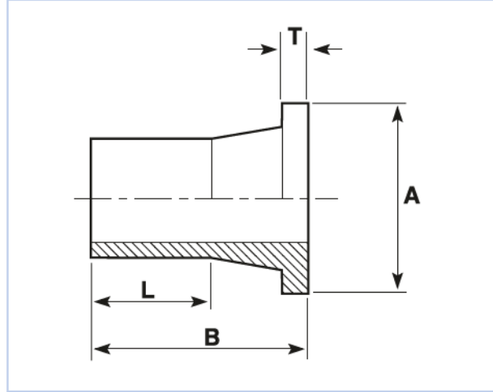

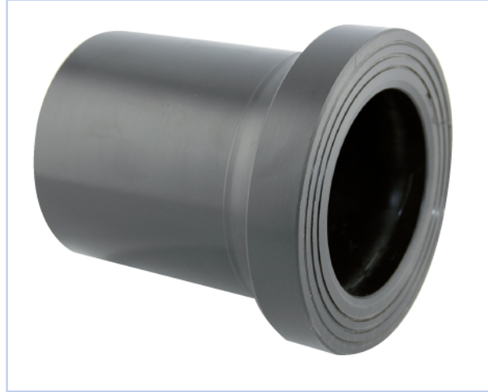

NOMINAL BORE SIZE INCH	NOMINAL BORE SIZE MM	PE PIPE SIZE (mm)
2”	50	75
2 ½”	65	90
3”	80	110
4”	100	125
4”	100	140
5”	125	160
6”	150	180
6”	150	200
8”	200	250
9”	225	280
10”	250	280
10”	250	315
12”	300	355
14”	350	400
16”	400	450

Full nominal bore, full sealing face, maximum strength.
Addresses the issue of bore size versus flange size in HDPE pipe at PN12.5 or higher pressure ratings.

Note: Flange table to be specified.

SIZE (mm)	NOMINAL FLANGE SIZE	INCH SIZE	TABLE D GALV (5471)	TABLE D STAINLESS (5472)	TABLE E GALV (5481)	TABLE E STAINLESS (5482)	ANSI 150LB GALV (5491)	ANSI 150LB STAINLESS (5492)
20	15	½”	54710020	54720020	54810020	54820020	54910020	54920020
25	20	¾”	54710025	54720025	54810025	54820025	54910025	54920025
32	25	1”	54710032	54720032	54810032	54820032	54910032	54920032
40	32	1¼”	54710040	54720040	54810040	54820040	54910040	54920040
50	40	1½”	54710050	54720050	54810050	54820050	54910050	54920050
63	50	2”	54710063	54720063	54810063	54820063	54910063	54920063
75	65	2½”	54710075	54720075	54810075	54820075	54910075	54920075
90	80	3”	54710090	54720090	54810090	54820090	54910090	54920090
110	100	4”	54710110	54720110	54810110	54820110	54910110	54920110
125	100	4”	54714125	54724125	54814125	54824125	54914125	54924125
125	125	5”	54715125	54725125	54815125	54825125	54915125	54925125
160	150	6”	54710160	54720160	54810160	54820160	54910160	54920160
180	150	6”	54710180	54720180	54810180	54820180	54910180	54920180
200	200	8”	54710200	54720200	54810200	54820200	54910200	54920200
225	200	8”	54710225	54720225	54810225	54820225	54910225	54920225
250	250	10”	54710250	54720250	54810250	54820250	54910250	54920250
280	250	10”	54710280	54720280	54810280	54820280	54910280	54920280
315	300	12”	54710315	54720315	54810315	54820315	54910315	54920315
355	350	14”	54710355	54720355	54810355	54820355	54910355	54920355
400	400	16”	54710400	54720400	54810400	54820400	54910400	54920400
450	450	18”	54710450	54720450	54810450	54820450	54910450	54920450
500	500	20”	54710500	54720500	54810500	54820500	54910500	54920500
560	550	22”	54710560	54720560	54810560	54820560	54910560	54920560
630	600	24”	54710630	54720630	54810630	54820630	54910630	54920630
710	650	26”	54710710	54720710	54810710	54820710	54910710	54920710
800	700	28”	54710800	54720800	54810800	54820800	54910800	54920800

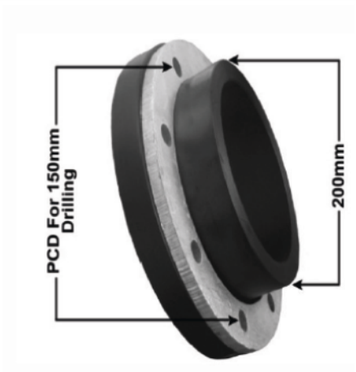

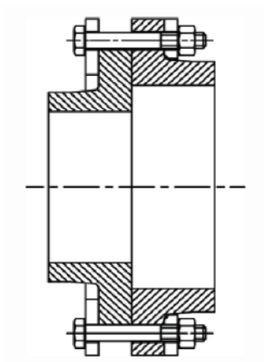

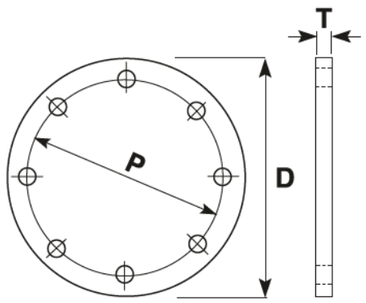

TABLE D GALVANISED BACKING RING (5441) STAINLESS BACKING RING (5442)

SIZE (mm)	NOMINAL FLANGE SIZE	INCH SIZE	GALV CODE	STAINLESS CODE	P (mm)	I (mm)	D (mm)	T (mm)	BOLT HOLES NO. X DIA	BOLT
20	15	½"	54510020	54520020	67	28	95	6	4x14	M12
25	20	¾"	54510025	54520025	73	34	100	6	4x14	M12
32	25	1"	54510032	54520032	83	42	115	7	4x14	M12
40	32	1 ¼"	54510040	54520040	87	51	120	8	4x14	M12
50	40	1 ½"	54510050	54520050	98	62	135	9	4x14	M12
63	50	2"	54510063	54520063	114	78	150	10	4x18	M16
75	65	2 ½"	54510075	54520075	127	92	165	10	4x18	M16
90	80	3"	54510090	54520090	146	108	185	11	4x18	M16
110	100	4"	54410110	54420110	178	128	215	10	4x18	M16
125	100	4"	54414125	54424125	178	135	215	10	4x18	M16
125	125	5"	54415125	54425125	210	140	255	13	8x18	M16
140	125	5"	54410140	54420140	210	158	255	13	8x18	M16
160	150	6"	54410160	54420160	235	178	280	13	8x18	M16
180	150	6"	54410180	54420180	235	188	280	13	8x18	M16
200	200	8"	54410200	54420200	292	235	335	13	8x18	M16
225	200	8"	54410225	54420225	292	240	335	13	8x18	M16
250	250	10"	54410250	54420250	356	290	405	16	8x22	M20
280	250	10"	54410280	54420280	356	300	405	16	8x22	M20
315	300	12"	54410315	54420315	406	345	455	19	12x22	M20
355	350	14"	54410355	54420355	470	376	525	22	12x26	M24
400	400	16"	54410400	54420400	521	430	580	22	12x26	M24
450	450	18"	54410450	54420450	584	480	640	25	12x26	M24
500	500	20"	54410500	54420500	641	533	705	29	16x26	M24
560	550	22"	54410560	54420560	699	590	760	29	16x30	M27
630	600	24"	54410630	54420630	756	660	825	32	16x30	M27
710	700	28"	54410710	54420710	845	745	910	35	20x30	M27
800	800	32"	54410800	54420800	984	835	1060	41	20x36	M33
900	900	36"	54410900	54420900	1092	947	1175	48	24x36	M33
1000	1000	40"	54411000	54421000	1175	1035	1255	51	24x36	M33

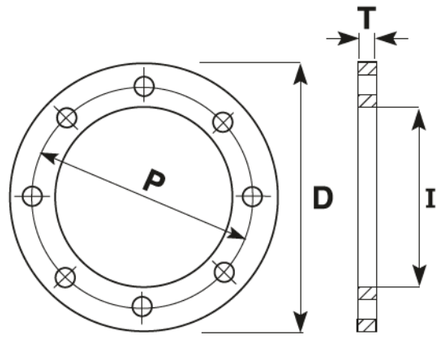

Note: Also available in A105 and Mild Steel.

GALVANISED BACKING RING (5451) STAINLESS BACKING RING (5452) TABLE E

SIZE (mm)	NOMINAL FLANGE SIZE	INCH SIZE	GALV CODE	STAINLESS CODE	P (mm)	I (mm)	D (mm)	T (mm)	BOLT HOLES NO. X DIA	BOLT
20	15	½"	54510020	54520020	67	28	95	6	4x14	M12
25	20	¾"	54510025	54520025	73	34	100	6	4x14	M12
32	25	1"	54510032	54520032	83	42	115	7	4x14	M12
40	32	1 ¼"	54510040	54520040	87	51	120	8	4x14	M12
50	40	1 ½"	54510050	54520050	98	62	135	9	4x14	M12
63	50	2"	54510063	54520063	114	78	150	10	4x18	M16
75	65	2 ½"	54510075	54520075	127	92	165	10	4x18	M16
90	80	3"	54510090	54520090	146	108	185	11	4x18	M16
110	100	4"	54510110	54520110	178	128	215	13	8x18	M16
125	100	4"	54514125	54524125	178	135	215	13	8x18	M16
125	125	5"	54515125	54525125	210	140	255	14	8x18	M16
140	125	5"	54510140	54520140	210	158	255	14	8x18	M16
160	150	6"	54510160	54520160	235	178	280	17	8x22	M20
180	150	6"	54510180	54520180	235	188	280	17	8x22	M20
200	200	8"	54510200	54520200	292	235	335	19	8x22	M20
225	200	8"	54510225	54520225	292	240	335	19	8x22	M20
250	250	10"	54510250	54520250	356	290	405	22	12x22	M20
280	250	10"	54510280	54520280	356	300	405	22	12x22	M20
315	300	12"	54510315	54520315	406	345	455	25	12x26	M24
355	350	14"	54510355	54520355	470	376	525	29	12x26	M24
400	400	16"	54510400	54520400	521	430	580	32	12x26	M24
450	450	18"	54510450	54520450	584	480	640	35	16x26	M24
500	500	20"	54510500	54520500	641	533	705	38	16x26	M24
560	550	22"	54510560	54520560	699	590	760	44	16x30	M27
630	600	24"	54510630	54520630	756	660	825	48	16x33	M30
710	700	28"	54510710	54520710	845	745	910	51	20x33	M30
800	800	32"	54510800	54520800	984	835	1060	54	20x36	M33
900	900	36"	54510900	54520900	1092	947	1175	64	24x36	M33
1000	1000	40"	54511000	54521000	1175	1035	1255	67	24x39	M36

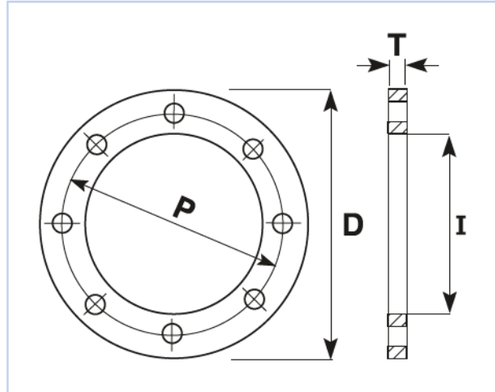

GALVANISED BACKING RING (5461)
REDUCED THICKNESS

SIZE (mm)	NOMINAL FLANGE SIZE	INCH SIZE	GALV CODE	P (mm)	I (mm)	D (mm)	T (mm)	BOLT HOLES NO. X DIA	BOLT
20	15	½"	54610020R	60.5	28	90	6	4x16	½"
25	20	¾"	54610025R	70	34	98	6	4x16	½"
32	25	1"	54610032R	79.5	42	108	7	4x16	½"
40	32	1 ¼"	54610040R	89	51	117	8	4x16	½"
50	40	1 ½"	54610050R	98.5	62	127	9	4x16	½"
63	50	2"	54610063R	120.5	78	152	10	4x20	⅝"
75	65	2 ½"	54610075R	139.5	92	178	10	4x20	⅝"
90	80	3"	54610090R	152	108	191	11	4x20	⅝"
110	100	4"	54610110R	190.5	128	229	13	8x20	⅝"
125	100	4"	54614125R	190.5	135	229	13	8x20	⅝"
125	125	5"	54615125R	216	135	254	14	8x22	¾"
140	125	5"	54610140R	216	158	254	14	8x22	¾"
160	150	6"	54610160R	241	178	279	17	8x22	¾"
180	150	6"	54610180R	241	188	279	17	8x22	¾"
200	200	8"	54610200R	298.5	235	343	19	8x22	¾"
225	200	8"	54610225R	298.5	240	343	19	8x22	¾"
250	250	10"	54610250R	362	290	406	22	12x26	⅞"
280	250	10"	54610280R	362	300	406	22	12x26	⅞"
315	300	12"	54610315R	432	345	483	25	12x26	⅞"
355	350	14"	54610355R	476	376	535	29	12x30	1"
400	400	16"	54610400R	540	430	600	32	16x30	1"
450	450	18"	54610450R	578	480	635	35	16x33	1⅛"
500	500	20"	54610500R	635	533	700	38	20x33	1⅛"
560	550	22"	54610560R	692	590	750	44	20x36	1¼"
630	600	24"	54610630R	750	660	815	48	20x36	1¼"

Note 1: The thickness of these backing rings has been reduced to comply with AS 2129 Table E Thickness.
Note 2: Stainless Steel (5462) available upon request.

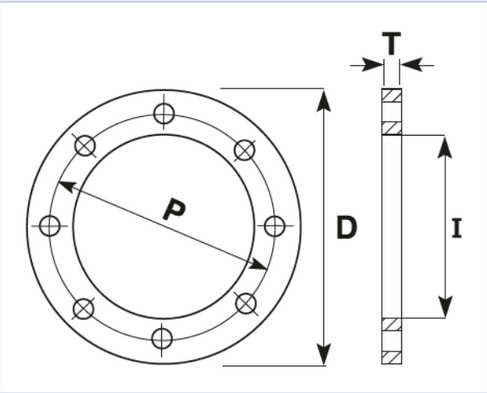

GALVANISED BACKING RING (5461)
STAINLESS BACKING RING (5462)
FULL THICKNESS

SIZE (mm)	NOMINAL FLANGE SIZE	INCH SIZE	GALV CODE	STAINLESS CODE	P (mm)	I (mm)	D (mm)	T (mm)	BOLT HOLES NO. X DIA	BOLT
20	15	½"	54610020F	54620020F	60.5	28	90	11.2	4x16	½"
25	20	¾"	54610025F	54620025F	70	34	98	12.8	4x16	½"
32	25	1"	54610032F	54620032F	79.5	42	108	14.2	4x16	½"
40	32	1 ¼"	54610040F	54620040F	89	51	117	15.7	4x16	½"
50	40	1 ½"	54610050F	54620050F	98.5	62	127	17.5	4x16	½"
63	50	2"	54610063F	54620063F	120.5	78	152	19	4x20	⅝"
75	65	2 ½"	54610075F	54620075F	139.5	92	178	22.3	4x20	⅝"
90	80	3"	54610090F	54620090F	152	108	191	23.9	4x20	⅝"
110	100	4"	54610110F	54620110F	190.5	128	229	23.9	8x20	⅝"
125	100	4"	54614125F	54624125F	190.5	135	229	23.9	8x20	⅝"
125	125	5"	54615125F	54625125F	216	135	254	23.9	8x22	¾"
140	125	5"	54610140F	54620140F	216	158	254	23.9	8x22	¾"
160	150	6"	54610160F	54620160F	241	178	279	25.4	8x22	¾"
180	150	6"	54610180F	54620180F	241	188	279	25.4	8x22	¾"
200	200	8"	54610200F	54620200F	298.5	235	343	28.4	8x22	¾"
225	200	8"	54610225F	54620225F	298.5	240	343	28.4	8x22	¾"
250	250	10"	54610250F	54620250F	362	290	406	30.2	12x26	⅞"
280	250	10"	54610280F	54620280F	362	300	406	30.2	12x26	⅞"
315	300	12"	54610315F	54620315F	432	345	483	31.8	12x26	⅞"
355	350	14"	54610355F	54620355F	476	376	535	35	12x30	1"
400	400	16"	54610400F	54620400F	540	430	600	36.6	16x30	1"
450	450	18"	54610450F	54620450F	578	480	635	39.7	16x33	1⅛"
500	500	20"	54610500F	54620500F	635	533	700	42.9	20x33	1⅛"
560	550	22"	54610560F	54620560F	692	590	750	46	20x36	1¼"
630	600	24"	54610630F	54620630F	750	660	815	47.7	20x36	1¼"

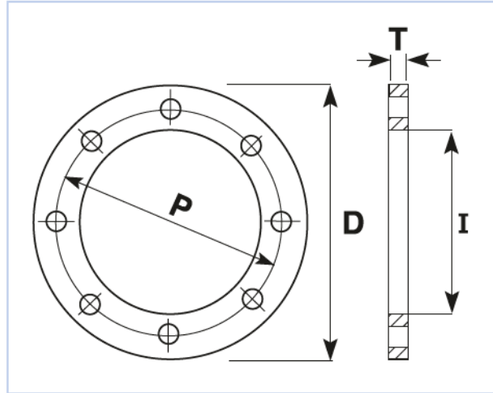

DCI FEMALE THREADED TAPPING BAND

Acu-Flow DCI Tapping Bands from Acu-Tech are the ultimate solution for connection of branch pipelines to PE main pipelines for cold water.

Constructed of epoxy coated solid ductile cast iron (DCI) with EPDM rubber seal, these fittings are designed to be durable and leak-free.

Upper and lower parts are fully rubber lined to prevent rotational movement of the tapping band on pipe.

SIZE (mm)	CODE	D-THREADED OFF-TAKE		d (mm)	L (mm)	L1 (mm)	A (mm)	F (mm)	H BOLT SIZE	WEIGHT (kg)
		INCH	MM							
32	92343220	¾”	20	20	65	39	65	91	M8x20	0.8
40	92344020	¾”	20	20	65	45	85	99	M8x20	1
40	92344025	1”	25	26	65	51	91	99	M8x20	1
50	92345025	1”	25	26	90	56	91	114	M10x25	1.4
63	92346325	1”	25	26	90	62	104.5	129	M10x25	1.7
63	92346332	1 ¼”	32	34	90	62	104.5	129	M10x25	1.7
63	92346340	1 ½”	40	40	90	70	110.5	129	M10x25	1.7
63	92346350	2”	50	52	90	70	110.5	129	M10x25	1.7

SIZE (mm)	CODE	D-THREADED OFF-TAKE		d (mm)	L (mm)	L1 (mm)	A (mm)	F (mm)	H BOLT SIZE	WEIGHT (kg)
		INCH	MM							
75	92347525	1”	25	26	115	68	116.5	141	M10x25	2.3
75	92347532	1 ¼”	32	34	115	68	116.5	141	M10x25	2.3
75	92347540	1 ½”	40	40	115	76	124.5	141	M10x25	2.3
75	92347550	2”	50	52	115	76	124.5	141	M10x25	2.3
90	92349025	1”	25	26	115	76	132	161	M12x25	2.8
90	92349040	1 ½”	40	40	115	83	139	161	M12x25	2.8
90	92349050	2”	50	52	115	83	139	161	M12x25	2.8
110	92341125	1”	25	26	115	86	153	189	M12x25	3.5
110	92341132	1 ¼”	32	34	115	86	153	189	M12x25	3.5
110	92341140	1 ½”	40	40	115	93	160	189	M12x25	3.5
110	92341150	2”	50	52	115	93	160	189	M12x25	3.5
125	92341225	1”	25	26	115	93	167.5	204	M12x25	3.8
125	92341232	1 ¼”	32	34	115	93	167.5	204	M12x25	3.8
125	92341240	1 ½”	40	40	115	100	174.5	204	M12x25	3.8
125	92341250	2”	50	52	115	100	174.5	204	M12x25	3.8
140	92341450	2”	50	52	140	108	190	219	M12x25	4.7
160	92341625	1”	25	26	140	111	203	239	M12x25	5.2
160	92341650	2”	50	52	140	118	210	239	M12x25	5.2
180	92341825	1”	25	26	180	121	223	259	M12x25	7.7
180	92341832	1 ¼”	32	34	180	121	223	259	M12x25	7.7
180	92341840	1 ½”	40	40	180	128	230	259	M12x25	7.7
180	92341850	2”	50	52	180	128	230	259	M12x25	7.7
200	92342050	2”	50	52	180	138	250	279	M12x25	8
225	92342250	2”	50	52	180	151	275.5	304	M12x25	9
250	92342550	2”	50	52	180	163	300	329	M12x25	9.8
280	92342850	2”	50	52	180	178	330	359	M12x25	10.6
315	92343150	2”	50	52	180	196	365.5	394	M12x25	13

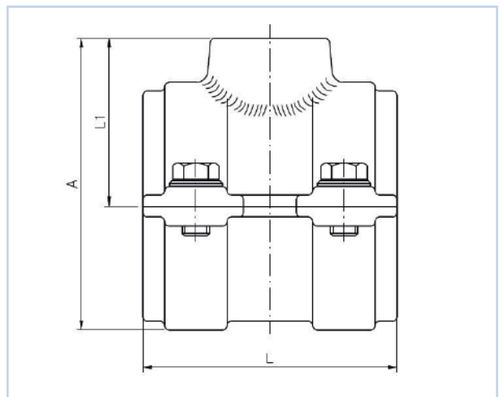

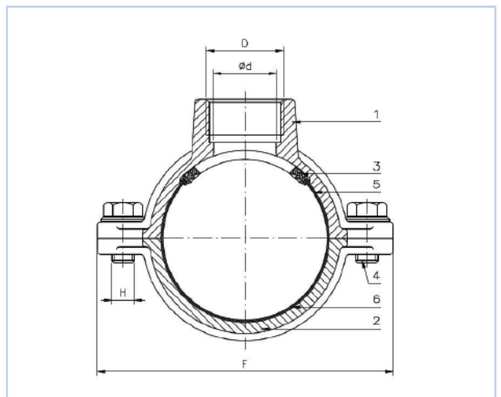

SIZE (mm)	NOMINAL FLANGE SIZE	STANDARD THICKNESS (mm)	AVAILABLE STANDARD/ THICKNESS
25	20	3	TABLE D/E ANSI150/4087
32	25	3	TABLE D/E ANSI150/4087
40	32	3	TABLE D/E ANSI150/4087
50	40	3	TABLE D/E ANSI150/4087
63	50	3	TABLE D/E ANSI150/4087
75	65	3	TABLE D/E ANSI150/4087
90	80	3	TABLE D/E ANSI150/4087
110	100	3	TABLE D/E ANSI150/4087
125	125	3	TABLE D/E ANSI150/4087
160	150	3	TABLE D/E ANSI150/4087
180	150	3	TABLE D/E ANSI150/4087
200	200	3	TABLE D/E ANSI150/4087
225	200	3	TABLE D/E ANSI150/4087
250	250	3	TABLE D/E ANSI150/4087
280	250	3	TABLE D/E ANSI150/4087
315	300	3	TABLE D/E ANSI150/4087
355	350	3	TABLE D/E ANSI150/4087
400	400	3	TABLE D/E ANSI150/4087
450	450	3	TABLE D/E ANSI150/4087
500	500	3	TABLE D/E ANSI150/4087
560	560	3	TABLE D/E ANSI150/4087
630	600	3	TABLE D/E ANSI150/4087

Note 1: Other thickness, dimensions and materials available on request.
Note 2: Available in all SDR ratings.

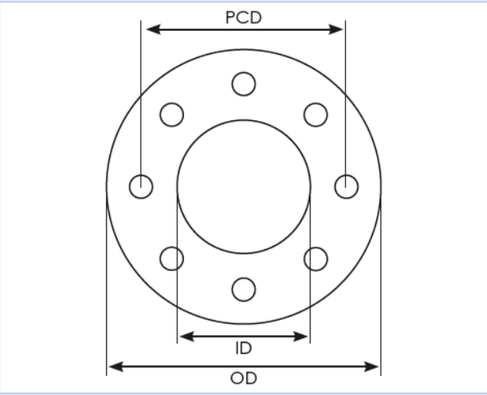

FLANGE RING GASKETS - KC6327 2mm FIBRE

KC6327 is a gasket material based on SBR-bound aramid fibres and inorganic fibres. Its key feature is a relative softness and high compressibility which enables sealing under lower bolt loads than most other fibre gaskets.

Following the correct flange installation procedure and using the correct bolt torques is critical to long term flange joint integrity. Contact us for more information and a copy of our Flange Joint Installation Guidelines.

Looking for flange gaskets made to your specifications? Please contact us as we supply a wide variety of fibre and rubber gaskets to order.

SIZE (mm)	NOMINAL FLANGE SIZE	SDR	CODE (9658)
25	20	11/17	96580025
32	25	11/17	96580032
40	32	11/17	96580040
50	40	11/17	96580050
63	50	11/17	96580063
75	65	11/17	96580075
90	80	11/17	96580090
110	100	11	96580110.11
125	125	17	96580125.17
160	150	11	96580160.11
180	150	17	96580180.17
200	200	11/17	96580200
225	200	11/17	96580225
250	250	11/17	96580250
280	250	11/17	96580280
315	300	11/17	96580315
355	350	11/17	96580355
400	400	11/17	96580400
450	450	11/17	96580450
500	500	11/17	96580500
560	560	11/17	96580560
630	600	11/17	96580630

Note: Other SDR's and custom sizes available on request.

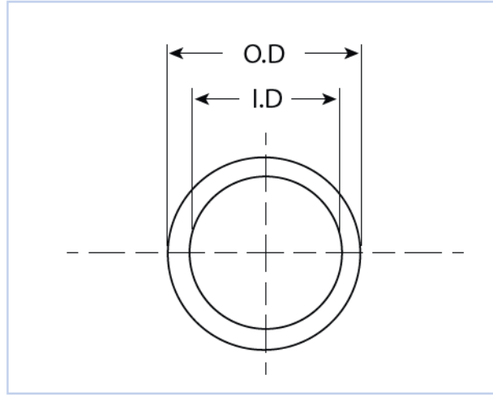

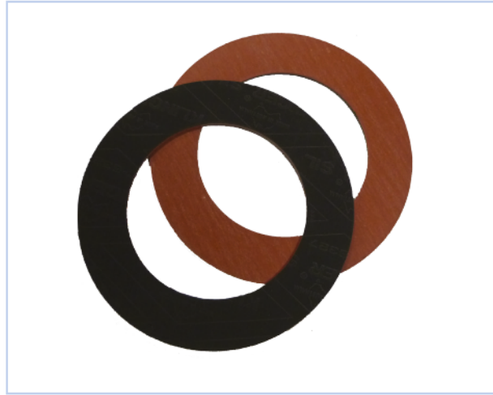

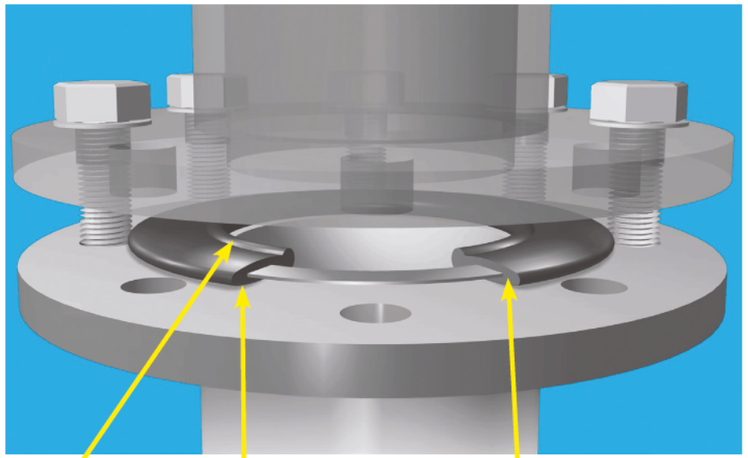

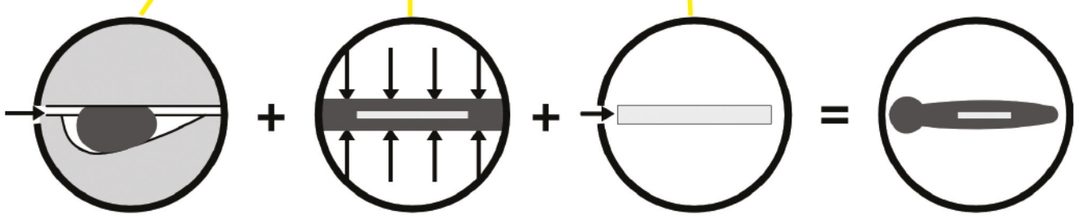

Sealing through round cord O'Ring system

Absorption of surface pressure

Absorption of inner pressure by steel ring

Steel-Core profile gasket

STEEL-CORE PROFILE™ RUBBER FLANGE GASKET

Tired of battling with leaking gaskets, flange misalignments and time consuming torqueing and re-torqueing procedures?

Get the job done quicker and eliminate leaks with the revolutionary Steel-Core™ Profile rubber gaskets!

These rubber gaskets are reinforced with the Steel-Core™ ring, which makes them rigid and prevents extrusion/ leaks under higher pressures which is a problem with plain rubber gaskets. They also have a special O-ring profile which increases sealing performance dramatically, effectively two sealing mechanisms in one gasket.

FOR MORE INFORMATION CALL US NOW ON 1300 270 270

SIZE (mm)	CODE (9584)
16	95840016
20	95840020
25	95840025
32	95840032
40	95840040
50	95840050
63	95840063
75	95840075
90	95840090
110	95840110

SIZE (mm)	CODE (9584)
125	95840125
140	95840140
160	95840160
200	95840200
225	95840225
250	95840250
280	95840280
315	95840315
355	95840355
400	95840400

KEY BENEFITS:

- Effective sealing under low bolt torque loads.
- Compensation of small surface imperfections.
- Flange face misalignment is more easily compensated than flat gaskets, especially fibre types.
- Seal maintained even with a small degree of flange movement.
- Higher durability of plastic flange joints due to lower torques helping to prevent distortion.
- Lower tensile grade fasteners required, providing cost savings.
- Steel-Core ring is vulcanised within the centre of the gasket, preventing corrosion.
- Will withstand pressures of up to 4,000 kPa (at 20°C) depending on flange.
- Made in Germany.

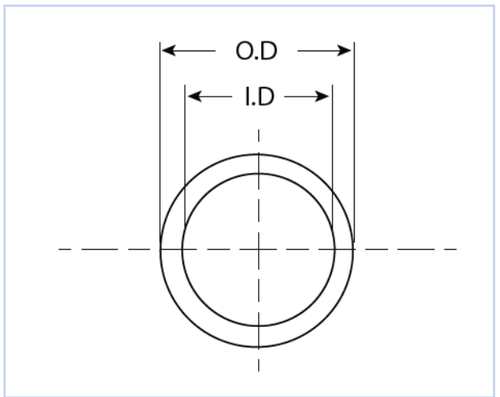

PIPE O.D	CODE SDR11	SDR11 A	B	C	dº	R	CODE SDR17	SDR17 A	B	C	dº	R
75	BFVS07511	61	108	14	20	71	BFVS07517	66	108	14	20	76
90	BFVS09011	75	129	20	20	89	BFVS09017	79	129	20	20	94
110	BFVS11011	90	160	14	20	100	BFVS11017	97	160	14	20	107
125	BFVS12511	102	160	25	25	125	BFVS12517	110	160	25	20	128
140	BFVS14011	115	192	25	20	133	BFVS14017	123	192	25	20	141
160	BFVS16011	131	213	25	25	154	BFVS16017	141	213	25	20	159
180	BFVS18011	149	213	30	10	160	BFSV18017	158	213	30	8	166
200	BFVS20011	164	270	40	30	210	BFVS20017	176	270	30	30	211
225	BFVS22511	184	270	25	25	207	BFVS22517	198	270	30	15	214
250	BFVS25011	205	334	60	25	261	BFVS25017	220	334	35	30	260
280	BFVS28011	229	334	30	30	264	BFVS28017	246	334	35	15	265
315	BFVS31511	258	380	50	25	304	BFVS31517	277	380	40	30	323
355	BFVS35511	291	444	80	12	325	BFVS35517	312	444	55	10	331
400	BFVS40011	325	495	85	20	387	BFVS40017	352	495	65	15	387
450	BFVS45011	366	545	90	20	432	BFVS45017	396	545	70	16	436
500	BFVS50011	407	596	100	20	480	BFVS50017	440	596	75	18	489
560	BFVS56011	456	657	70	30	537	BFVS56017	493	657	60	22	541
630	BFVS63011	513	710	100	20	586	BFVS63017	554	710	60	15	586
710	BFVS71011	577	800	120	25	689	BFVS71017	625	800	65	25	686
800	BFVS80011	644	940	130	30	794	BFVS80017	704	940	80	25	779

Note: Other sizes available upon request.

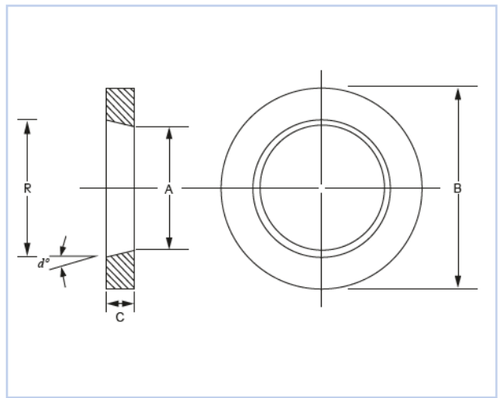

BOLT SET: TABLE D

- PE to Steel Flange Connection Galvanised Grade 4.6
- PE to Steel Flange Connection Stainless Steel
- PE to PE Flange Connection Galvanised Grade 4.6
- PE to PE Flange Connection Stainless Steel
- PE to Steel Flange Connection Galvanised Grade 8.8
- PE to PE Flange Connection Galvanised Grade 8.8

BOLT SET: TABLE E

- PE to Steel Flange Connection Galvanised Grade 4.6
- PE to Steel Flange Connection Stainless Steel
- PE to PE Flange Connection Galvanised Grade 4.6
- PE to PE Flange Connection Stainless Steel
- PE to Steel Flange Connection Galvanised Grade 8.8
- PE to PE Flange Connection Galvanised Grade 8.8

BOLT SET: ANSI 150

- PE to Steel Flange Connection Galvanised Grade 4.6
- PE to Steel Flange Connection Stainless Steel
- PE to PE Reduced Thickness Galvanised 4.6
- PE to PE Reduced Thickness Stainless Steel
- PE to Steel Reduced Thickness Galvanised 8.8
- PE to PE Reduced Thickness Galvanised 8.8
- PE to Steel Full Thickness Galvanised 4.6
- PE to Steel Full Thickness Stainless Steel
- PE to PE Full Thickness Galvanised 4.6
- PE to PE Full Thickness Stainless Steel
- PE to Steel Full Thickness Galvanised 8.8
- PE to PE Full Thickness Galvanised 8.8

Note: Contact our team for further information.

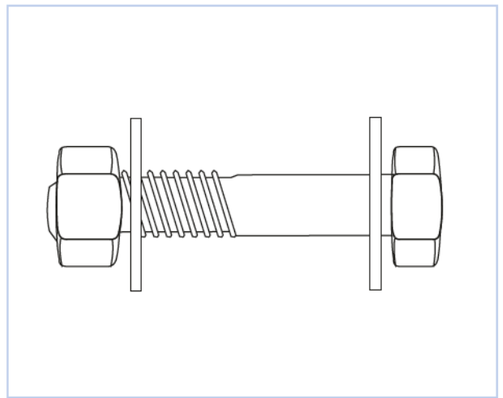

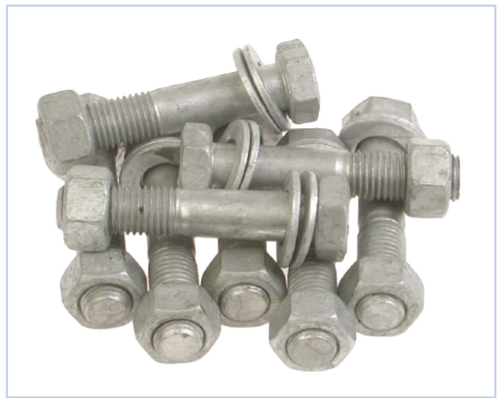

SPIGOT FITTINGS

Acu-Tech offers an extensive range of high quality PE100 Spigot Fittings sourced from leading European manufacturers. We hold a large inventory to ensure your project is delivered on time.

For more information call us now on 1300 270 270.

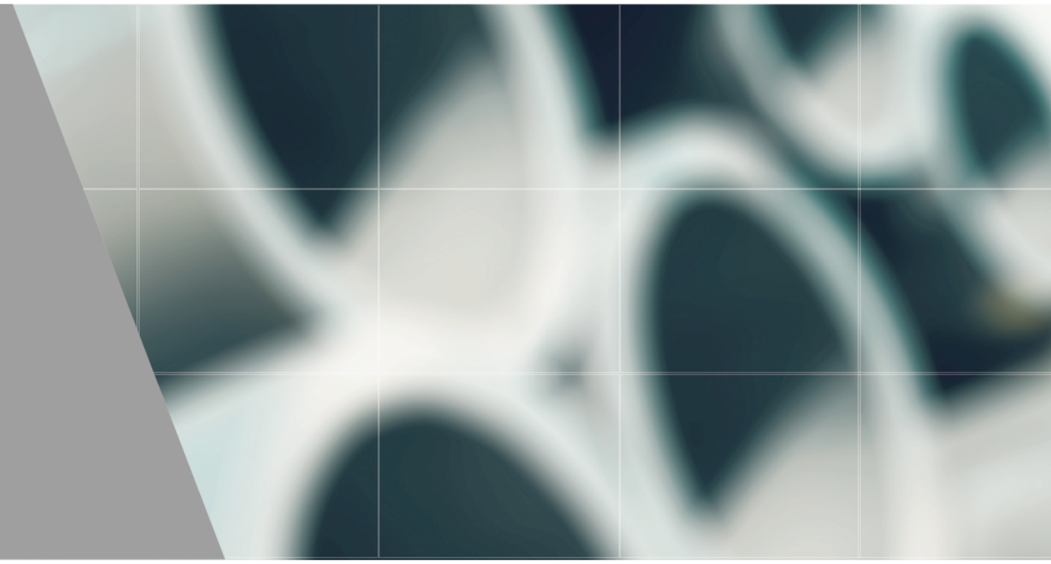

90° Long Spigot Elbow 62
45° Long Spigot Elbow 63
30° Long Spigot Elbow 64
90° Long Spigot Radius Bend 65
Long Spigot Equal Tee 66
Long Spigot Reducing Tee 67
45° Long Spigot Equal Tee 68
Concentric Long Spigot Reducer 69
Long Spigot End Cap 70
Long Spigot Test End Cap 71
PE/Brass Male Threaded Adaptor 72
PE/Brass Female Threaded Adaptor 73
PE Male BSP Adaptor 74
PE Female BSP Adaptor 75

90° LONG SPIGOT ELBOW (3054 / 3056)

PE100 • SDR11 • SDR17

SIZE (mm)	CODE SDR11 (3054)	CODE SDR17 (3056)	L (mm)	L1 (mm)
20	30540020	-	41	63
25	30540025	-	41	63
32	30540032	-	44	72
40	30540040	-	49	80
50	30540050	-	55	95
63	30540063	30560063	63	115
75	30540075	30560075	70	130
90	30540090	30560090	79	147
110	30540110	30560110	82	161
125	30540125	30560125	87	174
140	30540140	30560140	92	202
160	30540160	30560160	98	208
180	30540180	30560180	105	222
200	30540200	30560200	112	253
225	30540225	30560225	120	270
250	30540250	30560250	129	292
280	30540280	30560280	139	340
315	30540315	30560315	150	370
355	30540355	30560355	172	421
400	30540400	30560400	187	469
450	30540450	30560450	202	522
500	30540500	30560500	222	576

Note: Larger sizes available on request.

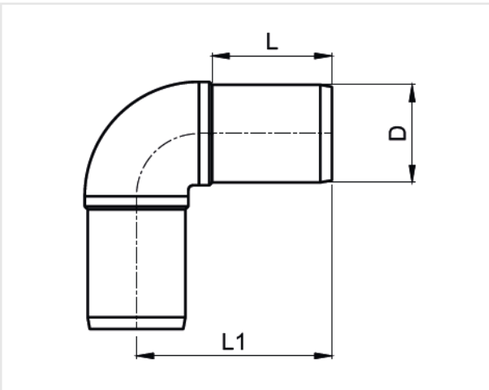

45° LONG SPIGOT ELBOW (3104 / 3106)

PE100 • SDR11 • SDR17

SIZE (mm)	CODE SDR11 (3104)	CODE SDR17 (3106)	L (mm)	L1 (mm)
20	31040020	-	41	70
25	31040025	-	41	75
32	31040032	-	44	80
40	31040040	-	49	85
50	31040050	-	55	90
63	31040063	31060063	63	95
75	31040075	31060075	70	105
90	31040090	31060090	79	120
110	31040110	31060110	82	130
125	31040125	31060125	87	140
140	31040140	31060140	92	150
160	31040160	31060160	98	160
180	31040180	31060180	105	170
200	31040200	31060200	112	185
225	31040225	31060225	120	200
250	31040250	31060250	129	217
280	31040280	31060280	139	238
315	31040315	31060315	150	256
355	31040355	31060355	172	317
400	31040400	31060400	187	346
450	31040450	31060450	202	375
500	31040500	31060500	222	409

Note: Larger sizes available on request.

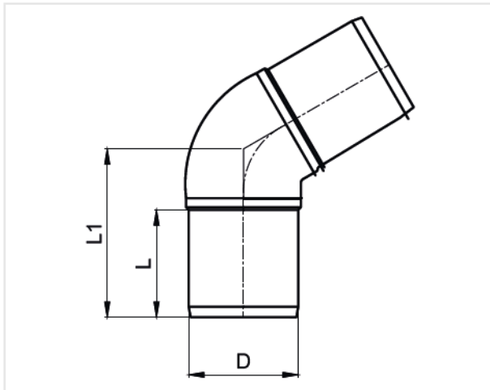

30° SPIGOT ELBOW (3114 / 3116)

PE100 • SDR11 • SDR17

SIZE (mm)	CODE SDR11 (3114)	CODE SDR17 (3116)	I (mm)	Z (mm)
75	31140075	31160075	77	103
90	31140090	31160090	85	110
110	31140110	31160110	95	130
125	31140125	31160125	100	142
140	31140140	31160140	103	144
160	31140160	31160160	116	155
180	31140180	31160180	120	165
200	31140200	31160200	125	175
225	31140225	31160225	133	188

Note: 30° spigot elbows are all custom made to order, due to low demand.

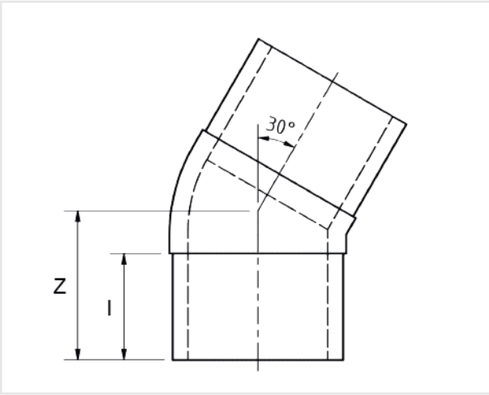

90° LONG SPIGOT RADIUS BEND (3754 / 3756)

PE100 • SDR11 • SDR17

D (mm)	CODE SDR11 (3754)	L (mm)	L1 (mm)	BOX
32	37540032	79	48	5
40	37540040	92	52	2
50	37540050	107	59	1
63	37540063	131	69	4
75	37540075	153	76	16
90	37540090	176	83	10
110	37540110	193	84	6
125	37540125	216	92	4
140	37540140	237	96	5
160	37540160	262	103	4
180	37540180	294	115	6
200	37540200	317	122	4
225	37540225	351	131	2
250	37540250	382	133	2
280	37540280	432	153	1
315	37540315	471	154	1

D (mm)	CODE SDR17 (3756)	L (mm)	L1 (mm)	BOX
50	37560050	108	59	1
63	37560063	130	67	4
75	37560075	152	76	16
90	37560090	173	83	10
110	37560110	193	85	6
125	37560125	216	92	4
140	37560140	237	97	5
160	37560160	260	102	4
180	37560180	290	113	6
200	37560200	317	122	4
225	37560225	350	130	2
250	37560250	382	134	2
280	37560280	430	154	1
315	37560315	465	153	1

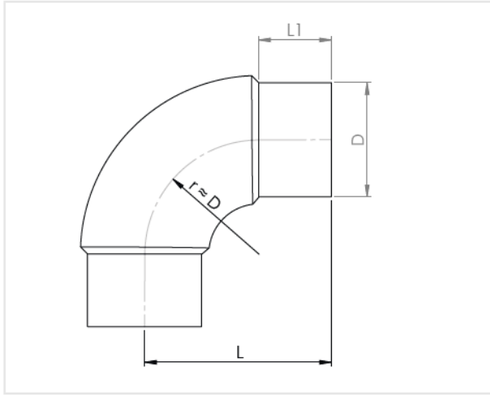

LONG SPIGOT EQUAL TEE (3154 / 3156)

PE100 • SDR11 • SDR17

SIZE (mm)	CODE SDR11 (3154)	CODE SDR17 (3156)	H (mm)	Z (mm)	L (mm)
20	31540020	-	34.5	54.5	109
25	31540025	-	41	62	124
32	31540032	-	51	75	150
40	31540040	-	55	82	164
50	31540050	-	61	95	190
63	31540063	31560063	67	114	228
75	31540075	31560075	73	121	242
90	31540090	31560090	82	153	306
110	31540110	31560110	98	172	344
125	31540125	31560125	102	180	360
140	31540140	31560140	105	195	390
160	31540160	31560160	124	225	450
180	31540180	31560180	117	233	466
200	31540200	31560200	127	253	506
225	31540225	31560225	136	275	550
250	31540250	31560250	140	298	596
280	31540280	31560280	150	325	650
315	31540315	31560315	160	350	700
355	31540355	31560355	173	390	780
400	31540400	31560400	187	431	862
450	31540450	31560450	202	476	952
500	31540500	31560500	225	525	1050
560	31540560	31560560	240	615	1230
630	31540630	31560630	250	660	1320

Note: Larger sizes available on request.

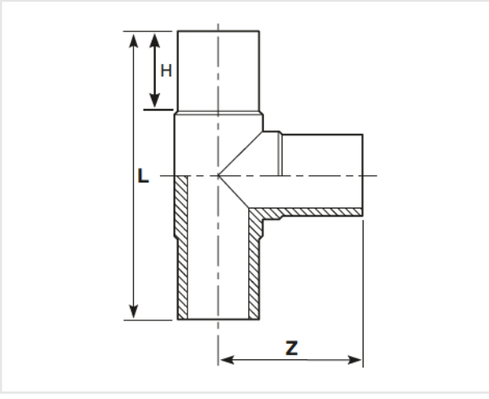

LONG SPIGOT REDUCING TEE (3164 / 3166)

PE100 • SDR11 • SDR17

SIZE 1 (mm)	SIZE 2 (mm)	L (mm)	Z (mm)	CODE SDR11 (3164)	CODE SDR17 (3166)
63	32	228	91	31646332	31666332
63	40	232	106	31646340	31666340
63	50	213	100	31646350	31666350
75	50	253	113	31647550	31667550
75	63	252	117	31647563	31667563
90	63	264	134	31649063	31669063
90	75	272	138	31649075	31669075
110	63	305	154	31641163	31661163
110	75	305	148	31641175	31661175
110	90	310	155	31641190	31661190
125	90	340	170	31641290	31661290
125	110	340	172	31641211	31661211
160	90	343	177	31641690	31661690
160	110	390	194	31641611	31661611
180	110	455	220	31641811	31661811
180	160	412	204	31641816	31661816

SIZE 1 (mm)	SIZE 2 (mm)	L (mm)	Z (mm)	CODE SDR11 (3164)	CODE SDR17 (3166)
200	63	550	225	31642063	31662063
200	110	550	240	31642011	31662011
200	125	550	240	31642012	31662012
200	160	550	265	31642016	31662016
225	160	490	246	31642216	31662216
225	180	552	246	31642218	31662218
250	160	440	315	31642516	31662516
250	180	622	525	31642518	31662518
250	200	622	525	31642521	31662521
315	160	575	310	31643116	31663116
315	180	752	600	31643118	31663118
315	200	752	600	31643120	31663120
315	225	638	335	31643122	31663122
315	250	670	333	31643125	31663125

Note: Larger sizes available on request.

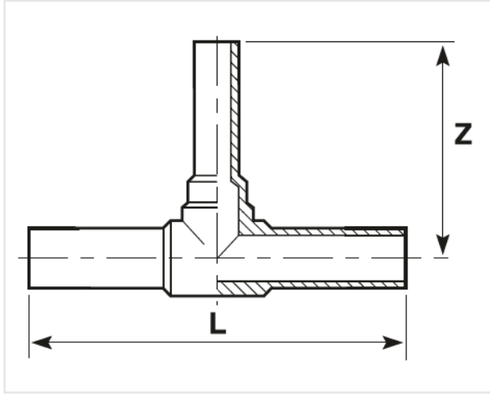

45° LONG SPIGOT EQUAL TEE (3694 / 3696)

PE100 • SDR11 • SDR17

SIZE (mm)	CODE SDR11 (3694)	CODE SDR17 (3696)	L (mm)	L² (mm)	Z (mm)
40	36940040	36960040	189	45	75
50	36940050	36960050	222	55	90
63	36940063	36960063	244	63	93
75	36940075	36960075	290	75	107
90	36940090	36960090	371	85	149
110	36940110	36960110	400	85	164
125	36940125	36960125	447	105	185
160	36940160	36960160	538	115	260
180	36940180	36960180	580	116	272
200	36940200	36960200	633	122	286
225	36940225	36960225	700	135	350
250	36940250	36960250	792	143	397
280	36940280	36960280	852	146	440
315	36940315	36960315	965	165	494

Note: These fittings are fully pressure rated as they are injection moulded.

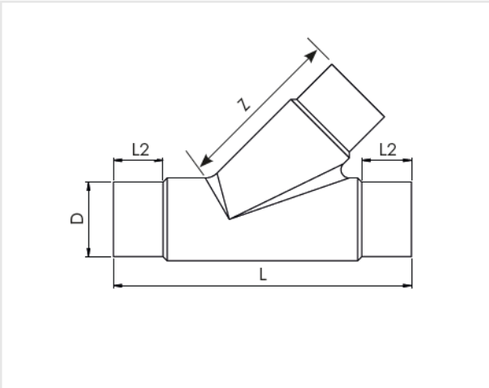

CONCENTRIC LONG SPIGOT REDUCER (3034 / 3036)

PE100 • SDR11 • SDR17

SIZE (mm)	CODE SDR11 (3034)	CODE SDR17 (3036)	L (mm)
25 x 20	30342520	-	87
32 x 20	30343220	-	92
32 x 25	30343225	-	92
40 x 20	30344020	-	102
40 x 25	30344025	-	102
40 x 32	30344032	-	102
50 x 25	30345025	-	118
50 x 32	30345032	-	118
50 x 40	30345040	-	126
63 x 32	30346332	-	136
63 x 40	30346340	-	128
63 x 50	30346350	-	150
75 x 50	30347550	-	148
75 x 63	30347563	30367563	149
90 x 63	30349063	30369063	157
90 x 75	30349075	30369075	163
110 x 63	30341163	30361163	180
110 x 75	30341175	30361175	177
110 x 90	30341190	30361190	187

SIZE (mm)	CODE SDR11 (3034)	CODE SDR17 (3036)	L (mm)
125 x 63	30341263	30361263	190
125 x 110	30341211	30361211	211
160 x 90	30341690	30361690	217
160 x 110	30341611	30361611	222
160 x 125	30341612	30361612	228
160 x 140	30341614	30361614	229
180 x 125	30341812	30361812	272
180 x 160	30341816	30361816	276
200 x 160	30342016	30362016	252
225 x 160	30342216	30362216	270
225 x 180	30342218	30362218	290
250 x 160	30342516	30362516	314
250 x 200	30342521	30362521	314
250 x 225	30342522	30362522	315
280 x 250	30342825	30362825	355
315 x 200	30343120	30363120	375
315 x 225	30343122	30363122	375
315 x 250	30343125	30363125	375
315 x 280	30343128	30363128	365

Note: Non-standard Reducers fabricated to order.

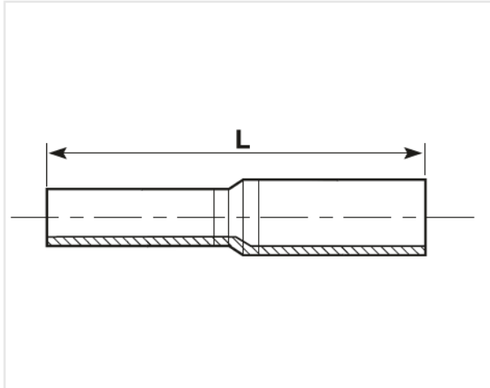

LONG SPIGOT END CAP (3274 / 3276)

PE100 • SDR11 • SDR17

SIZE (mm)	CODE SDR11 (3274)	CODE SDR17 (3276)	L (mm)
20	32740020	-	45
25	32740025	-	48
32	32740032	-	54
40	32740040	-	61
50	32740050	-	71
63	32740063	32760063	84
75	32740075	32760075	91
90	32740090	32760090	107
110	32740110	32760110	133
125	32740125	32760125	132
140	32740140	32760140	144
160	32740160	32760160	168
180	32740180	32760180	192
200	32740200	32760200	182
225	32740225	32760225	212
250	32740250	32760250	230
280	32740280	32760280	257
315	32740315	32760315	262

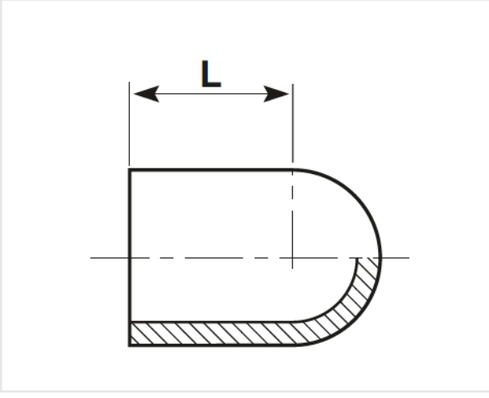

LONG SPIGOT TEST END CAP (3284 / 3286)

PE100 • SDR11 • SDR17

SIZE (mm)	CODE SDR11 (3284)	CODE SDR17 (3286)	L (mm)
63	32846325	32866325	84
75	32847525	32867525	91
90	32849025	32869025	107
110	32841125	32861125	133
125	32841225	32861225	132
140	32841425	32861425	144
160	32841625	32861625	168
180	32841825	32861825	192
200	32842025	32862025	182
225	32842225	32862225	212
250	32842525	32862525	230
280	32842825	32862825	257
315	32843125	32863125	262

Note: The test end cap has a 1" thread size.

Do you need a size that is not listed here? We can fabricate to your specifications, please call us on *1300 270 270* for more details.

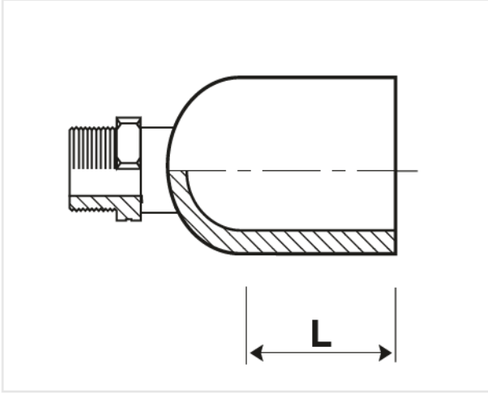

PE / BRASS MALE THREADED ADAPTOR (2334)

PE100 • SDR11 • PN16 WATER • 1000KPA GAS

SIZE (mm)		BSP THREAD SIZE INCH	BSP THREAD SIZE (mm)	PRODUCT CODE	L (mm)	L1 (mm)	BOX QTY
20	x	½"	15	23342015	96	41	100
25	x	¾"	20	23342520	95	38	100
32	x	1"	25	23343225	108	38	50
40	x	1¼"	32	23344032	122	44	27
50	x	1½"	40	23345040	125	44	27
63	x	2"	50	23346350	143	49	10
75	x	2½"	65	23347565	159	61	8
90	x	3"	80	23349080	178	60	5
110	x	4"	100	23341110	203	70	3

Looking for PE / Stainless Steel threaded fittings?
Call us now on 1300 270 270.

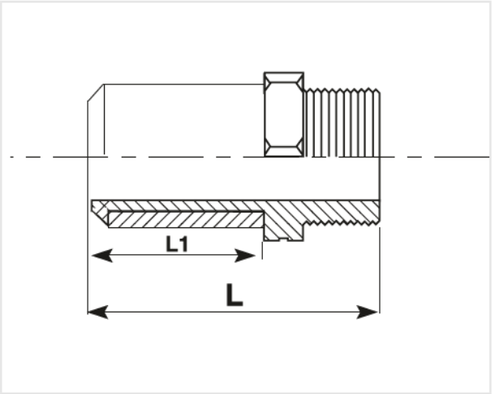

PE / BRASS FEMALE THREADED ADAPTOR (2344)

PE100 • SDR11 • PN16 WATER • 1000KPA GAS

SIZE (mm)		BSP THREAD SIZE INCH	BSP THREAD SIZE (mm)	PRODUCT CODE	L (mm)	L1 (mm)	BOX QTY
20	x	½"	15	23442015	79	41	150
25	x	¾"	20	23442520	80	38	100
32	x	1"	25	23443225	90	38	50
40	x	1¼"	32	23444032	100	44	36
50	x	1½"	40	23445040	103	44	27
63	x	2"	50	23446350	121	49	10
75	x	2½"	65	23447565	136	61	8
90	x	3"	80	23449080	149	60	5
110	x	4"	100	23441110	166	70	3

Looking for PE / Stainless Steel threaded fittings?
Call us now on 1300 270 270.

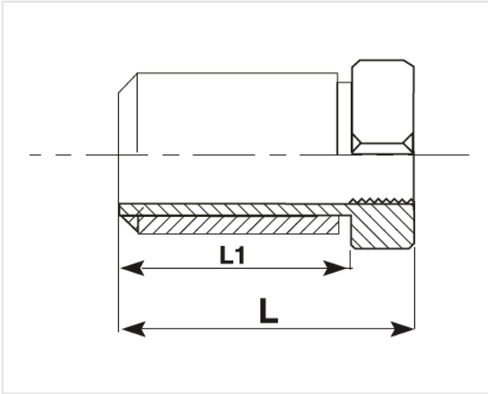

PE MALE BSP THREADED ADAPTOR (2354)

PE100 • SDR11–SDR17

SIZE (mm)		BSP THREAD SIZE INCH	BSP THREAD SIZE (mm)	PRODUCT CODE	L (mm)	L1 (mm)	BOX QTY
20	x	½"	15	23542015	95	38	100
25	x	¾"	20	23542520	95	38	100
32	x	1"	25	23543225	108	38	50
40	x	1¼"	32	23544032	122	44	27
40	x	1½"	40	23544040	122	44	27
50	x	1½"	40	23545040	125	44	27
63	x	2"	50	23546350	143	49	10
75	x	2½"	65	23547565	159	61	8
90	x	3"	80	23549080	178	60	5
110	x	4"	100	23541110	203	70	3
125	x	4"	100	23541210	172	92	3

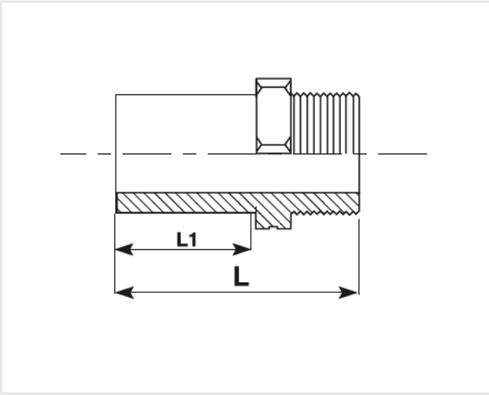

PE FEMALE BSP THREADED ADAPTOR (2364)

PE100 • SDR11–SDR17

SIZE (mm)		BSP THREAD SIZE INCH	BSP THREAD SIZE (mm)	PRODUCT CODE	L (mm)	L1 (mm)	BOX QTY
20	x	½"	15	23642015	80	38	100
25	x	¾"	20	23642520	80	38	100
32	x	1"	25	23643225	90	38	50
40	x	1¼"	32	23644032	100	44	36
40	x	1½"	40	23644040	100	44	36
50	x	1½"	40	23645040	103	44	27
63	x	2"	50	23646350	121	49	10
75	x	2½"	65	23647565	136	61	8
90	x	3"	80	23649080	149	60	5
110	x	4"	100	23641110	166	70	3

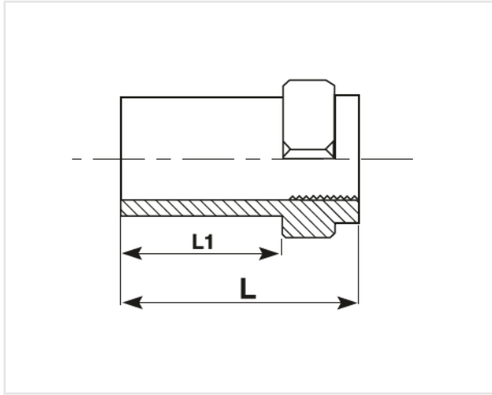

ELECTROFUSION FITTINGS

The Acu-Tech Electrofusion System is easy to use and offers high performance with a rapid, convenient method of joining polyethylene pipes. Precise positioning of the energising coils of wire in each fitting ensures uniform melting for a strong joint and the minimisation of welding and cooling time.

For more information call us now on 1300 270 270.

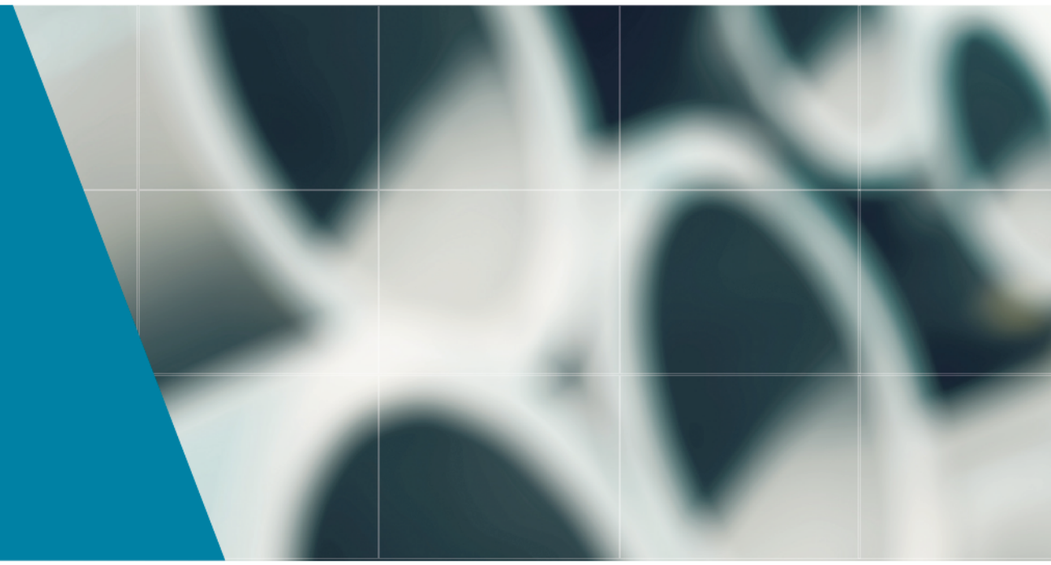

EF Coupler 78
EF Reducer 79
EF 90° Elbow 80
EF 45° Elbow 81
EF Equal Tee 82
EF Reducing Tee 83
EF Tapping Saddle 84
EF Branch Saddle 85
EF End Cap 86
EF Test End Cap with Brass Male BSP Thread 87

ELECTROFUSION COUPLER (2014 / 2016)

PE100 • SDR11-SDR17 • PN16 WATER • 1000KPA GAS

SIZE (mm)	CODE SDR11 (2014)	CODE SDR17 (2016)	L (mm)	L1 (mm)	D (mm)	BOX (QTY)
20	20140020	-	77	38	29	100
25	20140025	-	77	38	34	100
32	20140032	-	77	38	43	80
40	20140040	-	90	44	52	100
50	20140050	-	91	44	62	70
63	20140063	-	102	49	77	30
75	20140075	-	120	59	92	45
90	20140090	-	122	60	110	30
110	20140110	-	144	70	133	14
125	20140125	-	154	75	151	12
140	20140140	-	165	79	172	6
160	20140160	-	175	86	195	4
180	20140180	-	185	91	220	4
200	20140200	-	186	92	243	4
225	20140225	-	222	111	270	2
250	20140250	-	222	111	300	2
280	20140280	-	260	130	335	1
315	20140315	-	260	130	377	1
355	20140355	20160355	265	133	425 / 431	1
400	20140400	20160400	290	145	478 / 485	1
450	20140450	20160450	320	160	522 / 560	1
500	20140500	20160500	360	180	621 / 579	1
560	20140560	20160560	390	195	694 / 644	1
630	20140630	20160630	430	215	780 / 723	1

Note 1: SDR17 couplers are rated to Water PN10- Gas PN6.
Note 2: Large Couplers for 710mm to 1200mm are available on request.

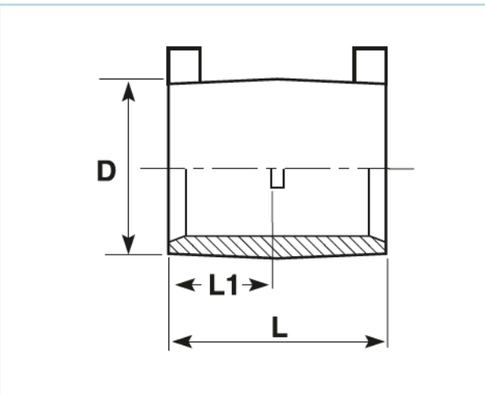

ELECTROFUSION REDUCER (2034 / 2036)

PE100 • SDR11-SDR17 • PN16 WATER • 1000KPA GAS

SIZE (mm)	PRODUCT CODE	L (mm)	L1 (mm)	L2 (mm)	D (mm)	D2 (mm)
25 x 20	20342520	74	34	34	25	20
32 x 20	20343220	79	33	36	32	20
32 x 25	20343225	79	33	36	32	25
40 x 20	20344020	88	33	39	40	20
40 x 25	20344025	88	33	39	40	25
40 x 32	20344032	88	33	39	40	32
50 x 32	20345032	96	35	43	50	32
50 x 40	20345040	96	39	43	50	40
63 x 32	20346332	105	35	48	63	32
63 x 40	20346340	105	39	48	63	40
63 x 50	20346350	105	43	48	63	50
75 x 63	20347563	124	60	58	75	63
90 x 63	20349063	146	63	47	90	63
90 x 75	20349075	154	77	62	90	75
110 x 63	20341163	184	71	58	110	63
110 x 90	20341190	173	73	63	110	90
125 x 90	20341290	180	79	61	125	90
125 x 110	20341211	169	85	76	125	110
160 x 90	20341690	227	90	72	160	90
160 x 110	20341611	226	90	71	160	110
180 x 125	20341812	254	96	78	180	125
200 x 160	20342016	365	104	90	200	160
225 x 160	20342216	385	112	90	225	160
225 x 200	20342220	390	112	104	225	200
250 x 160	20342516	400	123	90	250	160
250 x 200	20342521	417	123	104	250	200
250 x 225	20342521	430	123	112	250	225

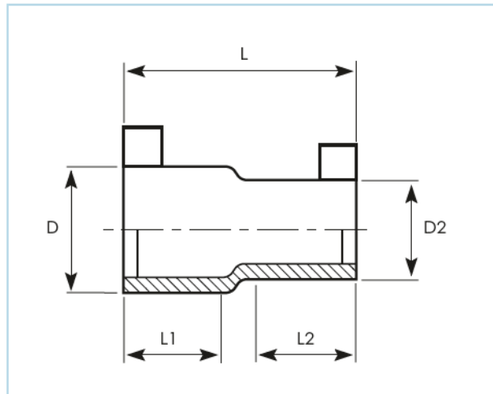

ELECTROFUSION 90° ELBOW (2054)

PE100 • SDR11-SDR17 • PN16 WATER • 1000KPA GAS

SIZE (mm)	PRODUCT CODE	L (mm)	L1 (mm)	D (mm)
20	20540020	54	34	20
25	20540025	54	34	25
32	20540032	53	36	32
40	20540040	62	39	40
50	20540050	71	43	50
63	20540063	81	48	63
75	20540075	94	54	75
90	20540090	122	62	90
110	20540110	147	72	110
125	20540125	155	77	125
160	20540160	191	92	160
180	20540180	210	96	180
200	20540200	298	104	200
225	20540225	318	112	225
250	20540250	347	123	250

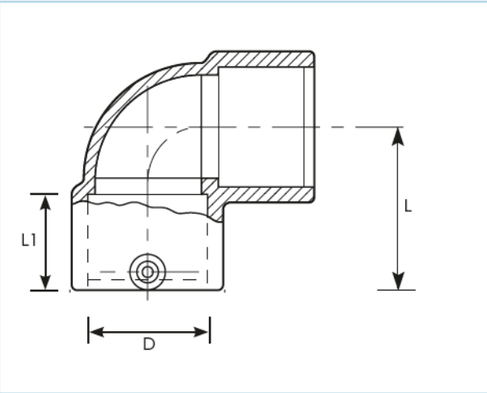

ELECTROFUSION 45° ELBOW (2104)

PE100 • SDR11-SDR17 • PN16 WATER • 1000KPA GAS

SIZE (mm)	PRODUCT CODE	L (mm)	L1 (mm)	D (mm)
32	21040032	44	36	32
40	21040040	50	39	40
50	21040050	56	43	50
63	21040063	63	48	63
75	21040075	71	54	75
90	21040090	91	62	90
110	21040110	112	72	110
125	21040125	119	78	125
160	21040160	135	92	160
180	21040180	144	95	180
200	21040200	232	104	200
225	21040225	247	112	225
250	21040250	275	123	250

Note: 22.5° elbow (2124) available in 180mm and other sizes.

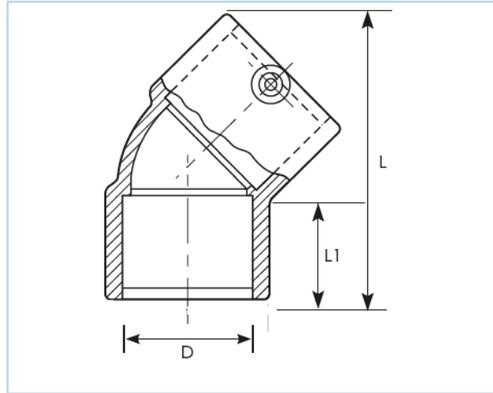

ELECTROFUSION EQUAL TEE (2154)

PE100 • SDR11-SDR17 • PN16 WATER • 1000KPA GAS

SIZE (mm)	PRODUCT CODE	L (mm)	L1 (mm)	D (mm)	A (mm)
20	21540020	88	32	20	92
25	21540025	90	32	25	92
32	21540032	102	34	32	100
40	21540040	119	39	40	114
50	21540050	135	42	50	126
63	21540063	151	46	63	150
75	21540075	178	54	75	143
90	21540090	205	62	90	161
110	21540110	255	72	110	184
125	21540125	276	78	125	207
160	21540160	325	92	160	206
180	21540180	344	90	180	250
200	21540200	590	104	200	250
225	21540225	636	112	225	270
250	21540250	685	123	250	288

Note: Centre of tee is a spigot fitting. A coupler is required.

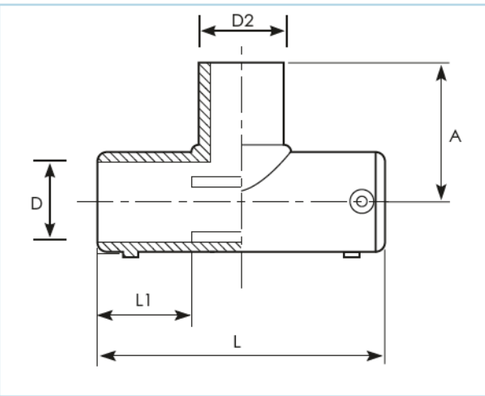

ELECTROFUSION REDUCING TEE (2164)

PE100 • SDR11-SDR17 • PN16 WATER • 1000KPA GAS

SIZE (mm)	PRODUCT CODE	L (mm)	L1 (mm)	D (mm)	D1 (mm)	D2 (mm)	A (mm)	BOX QTY
50 x 25	21645025	139	48	68	50	25	78	64
50 x 40	21645040	144	49	67	50	40	101	25
63 x 40	21646340	154	34	81	63	40	108	24
63 x 50	21646350	157	51	83	63	50	118	26
90 x 63	21649063	206	63	115.5	90	63	138	12
110 x 63	21641163	239	73	142	110	63	147	8
110 x 90	21641190	239	73	139	110	90	162	6
125 x 63	21641263	266	79	157	125	63	500	3
125 x 90	21641290	264	80	156	125	90	196	4
125 x 110	21641211	262	76	156	125	110	359	1
160 x 63	21641663	367	112	210	160	63	385	2
160 x 90	21641690	365	112	210	160	90	385	2
160 x 110	21641611	313	89	200	160	110	202	2
160 x 125	21641612	365	112	213	160	125	410	2
180 x 125	21641812	330	90	222	180	125	222	2

Note: Centre of tee is a spigot fitting. A coupler is required.

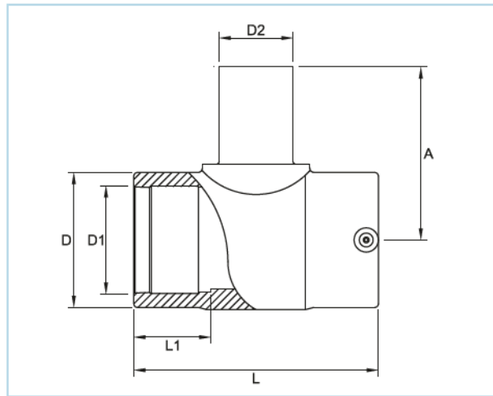

ELECTROFUSION TAPPING SADDLE (2214)

PE100 • SDR11-SDR17 • PN16 WATER • 1000KPA GAS

SIZE (mm)	PRODUCT CODE	L (mm)	H (mm)	H1 (mm)	W (mm)	BOX QTY
40 x 20	22144020	105	110	27	120	15
40 x 32	22144032	105	110	27	120	15
50 x 32	22145032	105	110	27	120	15
63 x 20	22146320	105	104	73	120	10
63 x 32	22146332	105	119	62	120	10
63 x 40	22146340	165	155	59.5	146	10
63 x 63	22146363	165	155	60	146	10
90 x 32	22149032	105	110	77	120	15
90 x 63	22149063	165	152	57	146	10
110 x 20	22141120	105	117	87	120	10
110 x 32	22141132	105	117	87	120	10
110 x 40	22141140	165	176	105	146	10
110 x 63	22141163	165	176	105	146	10
125 x 32	22141232	105	117	95	120	10
125 x 63	22141263	165	112	112	146	10
160 x 20	22141620	105	122	112	120	10
160 x 32	22141632	105	122	112	120	10
160 x 40	22141640	165	182	137	146	10
160 x 63	22141663	165	137	182	146	10
180 x 32	22141832	105	122	122	120	10
180 x 63	22141863	165	147	183	146	10
200 x 32	22142032	105	122	132	120	10
200 x 63	22142063	105	157	183	146	10
225 x 20	22142220	105	122	122	120	10
225 x 40	22142240	165	183	169	146	5
225 x 63	22142263	165	169	183	146	5
250 x 63	22142563	165	183	182	146	5

Note 1: Larger sizes and live tapping saddles available on request.
Note 2: Extensive range of main and branch options available. Contact us if the tapping saddle you require is not listed above.
Note 3: "No-blow" tube attachment supplied as standard for tapping into live mains.

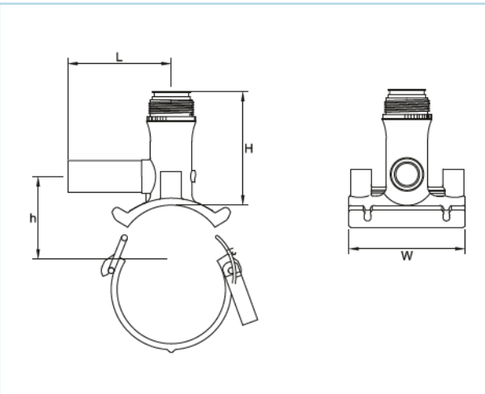

ELECTROFUSION BRANCH SADDLE (2224)

PE100 • SDR11-SDR17 • PN16 WATER • 1000KPA GAS

SIZE (mm)	PRODUCT CODE	L1 (mm)	E (mm)	BOX QTY
63 x 32	22246332	106	105	10
63 x 40	22246340	106	105	10
63 x 50	22246350	106	105	10
63 x 63	22246363	106	105	10
90 x 63	22249063	124	144	10
110 x 63	22241163	70	165	5
110 x 90	22241190	121	165	5
125 x 63	22241263	102	118	5
125 x 90	22241290	84	180	5
160 x 63	22241663	114	118	2
160 x 90	22241690	110	215	2
160 x 110	22241611	121	217	2
180 x 90	22241890	100	215	2
180 x 110	22241811	121	217	2
180 x 125	22241812	121	217	2
200 x 63	22242063	104	118	2
200 x 90	22242090	115	165	2
225 x 63	22242263	104	118	2
225 x 90	22242290	113	165	2
225 x 125	22242212	123	310	2
250 x 63	22242563	104	118	2
250 x 90	22242590	120	165	2
250 x 125	22242512	110	310	2
280 x 63	22242863	104	118	2
315 x 63	22243163	104	118	2
355 x 63	22243563	104	118	2

Note: Larger sizes and live tapping systems available on request.

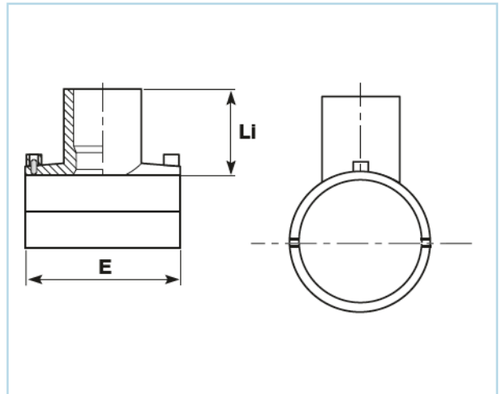

ELECTROFUSION END CAP (2274)

PE100 • SDR11-SDR17 • PN16 WATER • 1000KPA GAS

SIZE (mm)	PRODUCT CODE	L (mm)	L1 (mm)	D (mm)	BOX QTY
20	22740020	82	38	29	100
25	22740025	82	38	34	100
32	22740032	84	38	43	80
40	22740040	97	44	52	100
50	22740050	101	44	62	70
63	22740063	115	49	77	30
75	22740075	133	59	92	20
90	22740090	138	60	110	24
110	22740110	164	70	133	14
125	22740125	175	75	151	10
140	22740140	236	79	172	6
160	22740160	202	86	195	4
180	22740180	214	91	220	4
200	22740200	215	92	243	4
225	22740225	222	109	270	2
250	22740250	220	108	295	2
280	22740280	390	127	345	1
315	22740315	395	128	386	1

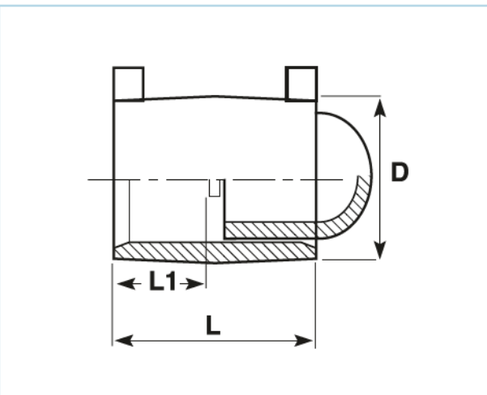

EF TEST END CAP WITH BRASS MALE BSP THREAD (2284)

PE100 • SDR11-SDR17 • PN16 WATER • 1000KPA GAS

SIZE (mm)	PRODUCT CODE 1" (25mm) BSP	L (mm)	L1 (mm)	D (mm)	BOX QTY
90	22849025	193	60	110	25
110	22841125	220	70	133	18
125	22841225	230	75	151	10
140	22841425	257	89	176	6
160	22841625	269	85	196	4
180	22841825	270	91	220	4
200	22842025	275	108	243	2
225	22842225	277	109	276	2
250	22842525	291	108	301	2
280	22842825	445	127	345	1
315	22843125	452	128	386	1

Note: Other sizes and female threads available on request.

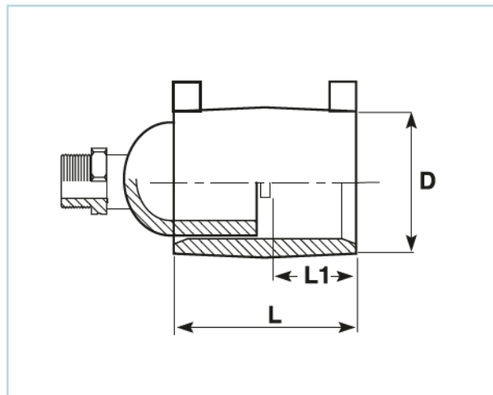

ADDITIONAL SERVICES

From a fully equipped fabrication workshop to a nation-wide Registered Training Organisation, we have many additional services to assist you in completing your project.

Need more information? Call us now on 1300 270 270.

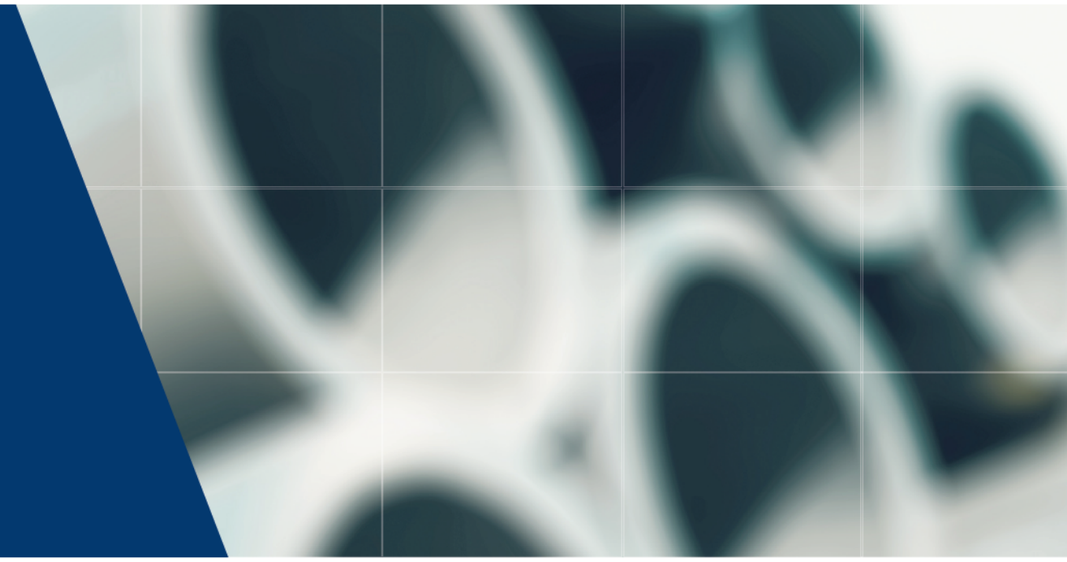

Fabrication Services 90-93
Equipment Sales and Hire 94-97
Polyweld Tech Academy 98-99

FABRICATION SERVICES

Polyethylene & Polypropelyne Fabrication Services

Delivered on-time, to specification, with the documentation complete.

If you're tired of long lead times and poor quality, or need a PE fabrication job completed urgently because your client has amended their plans at the last minute, then our Acu-Fab department can help.

With a fully equipped fabrication workshop and experienced and qualified operators, Acu-Tech Piping Systems fabricates pipe spools and components from pipe and sheet to suit client requirements.

Call us now on 1300 270 270.

Design Support

Do you need a complex pipe spool or tank fabricated? Limited space to work with? Struggling with a metal corrosion problem?

The fabrication possibilities in HDPE are limited only by your imagination! The fully qualified Acu-Fab team has decades of combined experience, so fabrication complexity is a challenge we enjoy. We can fabricate almost anything from poly pipe and sheet. We work in partnership with our clients to provide bespoke, pre-fabricated solutions.

Shorter Lead Times

We understand that you are often working to tight deadlines and need your poly fabrications fast!

That's why we have a 6,000 m^2 HDPE fabrication facility with a fully equipped workshop to ensure your fabrication is completed on time. We also have the capacity to put on extra shifts for those really urgent jobs.

And because the Acu-Fab division is located within the Acu-Tech factory complex, raw materials are directly available which helps to reduce lead times. This also allows the Acu-Fab team access to the extensive knowledge, experience and resource of the wider Acu-Tech team.

Logistics is where we can help you reduce delays too. With in-house expertise and good relationships with quality transport companies, we'll get it to your site fast and cost effectively!

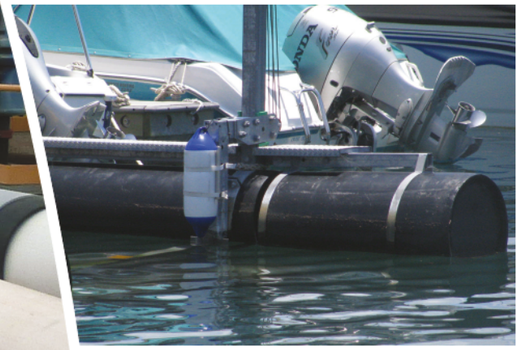

PIPEWORK FABRICATIONS:

- Pipe spool fabrication
- Pipework and valve preassembly service
- Manifolds
- Puddle flanges
- Bore headworks
- Suction lines
- Pump pipework
- Poly floats and pontoons
- Offsets
- Scour tees
- Overflows
- Suction strainers
- Full face flanges
- Flanged pipes and fittings

SHEET FABRICATIONS:

- Customised fabrications from sheet (cut/roll/bend/weld/machine)
- Fabricated plastic tanks and hoppers
- Inspection pits
- Sumps
- Chutes and chute lining
- Wear lining systems
- Pylon and pile sleeving
- Bunds and spill containment
- Machining and CNC routing of HDPE PVC and PP

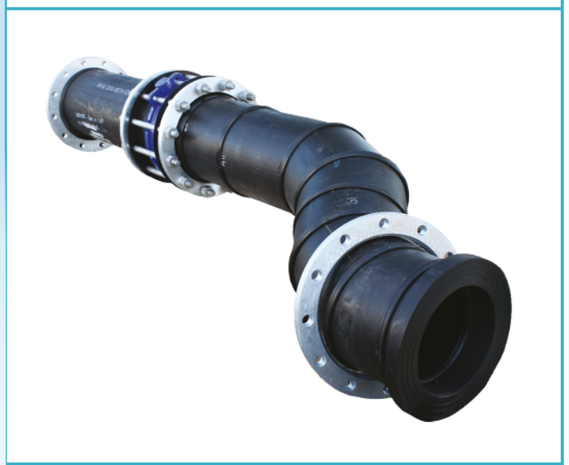

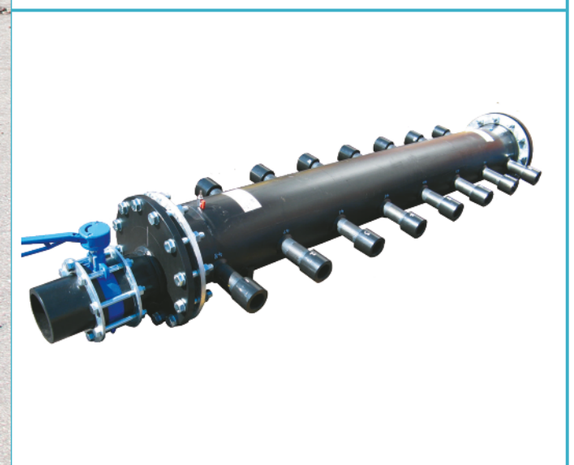

FABRICATION SERVICES

Quality Assurance & Documentation

We understand that Quality Assurance and MDR (Manufacturer Data Records) are key requirements of major projects.

With the combination of:

- Quality Management Systems to ISO 9001.
- Fully qualified and experienced staff.
- Calibrated fusion welding equipment.
- Access to Polyweld Tech Academy, a NATA Accredited Weld and Materials Testing Laboratory located next door.

Acu-Fab has the capability to produce high quality fabrications in accordance with your specifications, and will ensure that all QA/QC documentation requirements are fully completed as required.

Certified System
Quality
ISO 9001

BUTT FUSION WELDERS

Acu-Tech Piping Systems stock a range of butt fusion welders available for sale and are all ready to go for your next piping installation project.

UFuse is a range of quality designed butt fusion welding machines that are reliable and low maintenance, ready for use at your next construction project that requires pipe installation either in the field or on-site.

Each of our welding sets consist of a:
- main machine with base frame, clamping rings and hydraulic cylinders
- hydraulic power pack
- heating element
- trimmer/cutter
- stand for the heating element and trimmer
- set of clamp inserts
- stub end device
- tool kit

Our suite of butt weld equipment has a welding size range of 32mm to 630mm (outside diameter).

Brands sold include Dixon, Ritmo and UFuse.

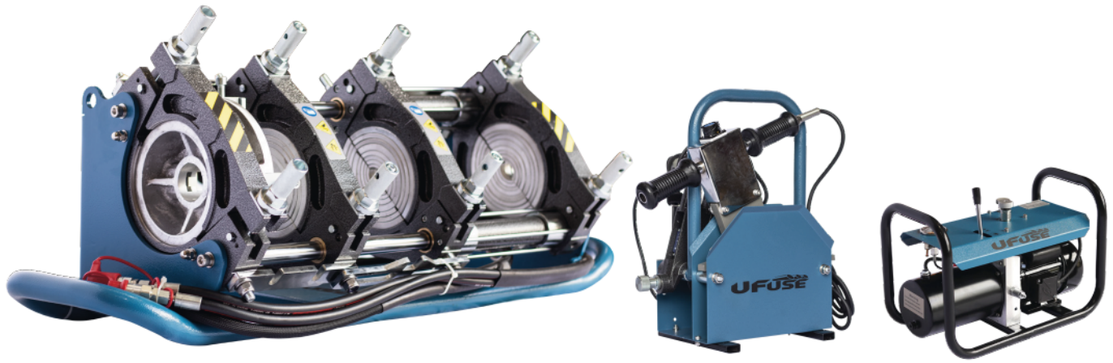

CALIBRATION AND SERVICING

Acu-Tech's equipment department can service your electrofusion welder, butt welder or extrusion welder, as well as a range of hand tools. All major branded welding equipment can be repaired or calibrated from our fully equipped workshop in Western Australia. Our experienced team can arrange consumables or spare parts from various manufacturers, either locally or from overseas suppliers.

EQUIPMENT SALES

ELECTROFUSION WELDERS

HST300 Smart
- Operating range up to 160mm
- Professional welding control
- Data traceability management
- Automatic data logging
- 500 report memory
- Barcode scanner for data input
- Quality carry bag with shoulder strap
- USB interface for data transfer

HST300 Print 450
- Operating range up to 450mm
- Professional welding control
- Data traceability management
- Automatic data logging
- 5,000 report memory
- Data input by barcode scanner or manual input
- Bluetooth connectivity to view or transfer weld data via the WeldTrace app
- USB interface or Bluetooth for data transfer
- Welder ID management configuration

HST300 GPS Print+
- Operating range up to 1200mm
- Professional welding control
- Data traceability management to ISO 12176-2/4
- GPS recording of time and geo-coordinates
- Automatic data logging
- 10,000 report memory
- Data input by barcode scanner, Fusamatic autoID or manual input
- Bluetooth connectivity to view or transfer weld data via the WeldTrace app
- USB interface or Bluetooth for data transfer
- Dedicated print menu to transfer to (optional) label printer
- Welder ID management configuration
- Dedicated memory back-up routine
- Large, easy read display with adjustable contrast and a wide viewing angle

EXTRUSION WELDERS

Acu-Tech supplies and services a range of quality extrusion welders to suit all applications.

Contact our team on 1300 270 270 for further information.

BUTT FUSION WELDERS

Acu-Tech offer a range of butt welding machines for hire to allow you to focus on the project at hand, without the investment of equipment upfront.

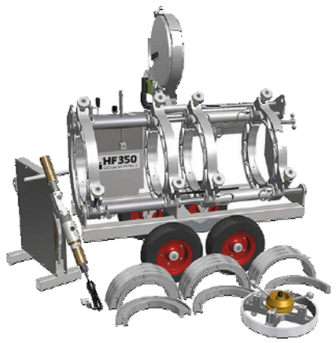

Dixon

- LF110 (110mm) Butt Welder
- HF225 (225mm) Butt Welder
- EHF225 (225mm) Butt Welder
- HF350 (355mm) Butt Welder
- EHF350 (355mm) Butt Welder
- HF630 (630mm) Butt Welder

McElroy

- Pitbull 110mm Butt Welder
- Rolling 250mm Butt Welder
- T618 TracStar (450mm) Butt Welder
- T500 TracStar (500mm) Butt Welder
- T900 TracStar (900mm) Butt Welder

Ritmo

- 355mm All-Terrain Butt Welder
- 630mm All-Terrain Butt Welder

Fast Fusion

- MFT20 Mobile Fusion (500mm) Butt Welder

ELECTROFUSION WELDERS

Acu-Tech have a range of Huerner electrofusion machines available for hire.

Disposable Welding Wipes

Pipe Cutters

Squeeze Off-Tools

Re-Rounding Clamps

Strap Clamps

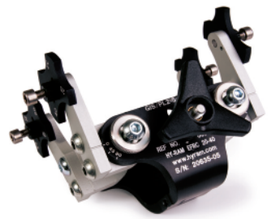

Small Clamps

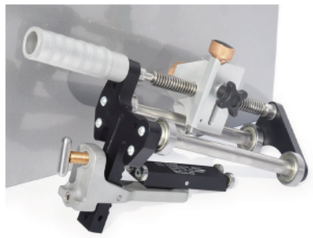

Multi Rotary Spring-Loaded Scraper

Mono Pipe Scraper

Turbo Pipe Scraper

Pipe Rollers

Debeaders

Thermometers

For detailed specifications, model numbers and prices contact our friendly sales team on 1300 270 270.

OUR VISION

To be recognised as the leading provider of HDPE joint and material testing services, and plastics welder training.

polyweldtech.com.au

POLYWELD TECH
ACADEMY

Polyweld Tech Academy is both a NATA endorsed laboratory and Registered Training Organisation specialising in the following areas:

Training:

Polyweld Tech Academy is accredited to deliver the following Nationally Recognised plastics welder training programs:

- Join Polyethylene Plastic Pipelines using Butt Welding (PMBWELD301E)
- Join Polyethylene Plastic Pipelines using Electrofusion Welding (PMBWELD302E)
- Weld Plastic using Extrusion Techniques (PMBWELD309E)

With facilities in Perth, Brisbane and Melbourne, our highly experienced trainers will happily travel nationwide to a location convenient for you. The combination of training and testing gives us helpful insight into the areas of welding that may require attention.

RTO Provider Code: 40687

NATA World Recognised Accreditation

PIPA Plastics Industry Pipe Association of Australia Limited

Nationally Recognised Training

Testing:

Polyweld Tech's NATA Accreditated test laboratory provides HDPE weld testing and material analysis. With the latest technology and experienced technicians we guarantee accurate results.

Testing services include:

- Tensile testing of butt welded joints to ISO 13953 - Polyethylene (PE) pipes and fittings - Determination of the tensile strength and failure mode
- Electrofusion joint peel decohesion testing to ISO 13954 - Peel decohesion test for electrofusion assemblies
- Electrofusion joint crush decohesion testing to ISO 13955 - Plastics pipes and fittings - Crushing decohesion test for polyethylene (PE) electrofusion assemblies
- Bend Testing of butt welded joints to BSEN 12814.1 - 2000 - Testing of welded joints - Bend test
- Shear and peel strength tests on geomembrane HDPE liners to ASTM D6392 - Determining the Integrity of Nonreinforced Geomembrane Seams Produced using Thermo-Fusion
- Oxidation Induction Time (OIT) to 11357-6 Part 6: Determination of oxidation induction time
- Melt Flow Rate Testing to ISO 1133 Plastics - Determination of the melt mass-flow rate (MFR) and the melt volume-flow rate (MVR) of thermoplastics
- Differential Scanning Calorimetric Analysis
- Moisture and Volatile Content Analysis

Call us now on 1300 367 659

USEFUL INFORMATION

With our own fleet of trucks and drivers we can provide the complete package solution for your project. We accommodate pipe loading up to 20m in length and 800mm diameter. Our transport team is committed to delivering orders to your site in full and on time safely whilst ensuring efficient unloading and quality service.

Should you require further information, do not hesitate to contact our sales team on 1300 270 270.

Truck Pipe & Coil Capacity 102

APPROXIMATE PIPE CAPACITY OF TRUCKS

STRAIGHT LENGTHS

PIPE O.D (mm)	NO. OF PIPES 12m • SDR11	NO. OF PIPES 20m • SDR11
110mm	462	325
125mm	396	250
140mm	374	205
160mm	252	155
180mm	170	125
200mm	165	100
225mm	114	78
250mm	108	64
280mm	80	51
315mm	63	40
355mm	48	32
400mm	35	25
450mm	27	19
500mm	24	16
560mm	18	13
630mm	15	10
710mm	12	8
800mm	8	6

COILS

PIPE O.D (mm)	NO. OF COILS
63	45
75	40
90	25
110 (100m)	20
125	16
140	12
160	8- 12

Note: Based on semi-trailer capacity. Quantities may not always be achieveable.
This information is provided as a guide only.
Contact our team for advice on your project logistics.

BENDING RADIUS

PE PIPE SDR	MIN BEND RADIUS (X DN)
9	12
11	15
13.6	21
17/17.6	25
21	35
26	45
33	65
Fitting or flange present in the curve	See recommendations below

EXAMPLE
The minimum radius of bend for placing a 500mm, SDR 11 PE pipe is: (500 x 15) mm = 7.5m
Where the required bend radii is less than the manufacturer's specified minimum radii formed bends shall be used to prevent undue stresses in the pipeline.

BUTT FUSION JOINTS
Where butt fusion joints will be installed as part of a curved pipeline all welding, including the full cooling cycle must be completed on straight pipe sections prior to curving. Pipelines including butt fusion joints can be curved to the minimum bend radii of plain pipe as defined in the table above.

ELECTROFUSION FITTINGS AND MECHANICAL JOINTS
Where electrofusion, flanged or other mechanical fittings are required on the curved section, it is advisable to seek the advice of the fitting manufacturer as in some cases different minimum radii will be required to avoid the creation of high localised stresses at the fitting. As a general guide the minimum bend radii for pipelines containing these fittings should be 100 times DN.
Electrofusion Fittings:
• All EF joints shall be welded with the pipeline straight (i.e. prior to any curving)
• The full welding and cooling cycle must be completed before bending the pipeline. Many fitting manufacturers also recommend an additional cooling period of the order of 4 times the recommended cooling cycle before the pipeline is curved.
Mechanical Fittings: In the case of mechanical fittings the same minimum bend radii as applied to plain pipe can be used for fittings up to and including DN63 where the fittings meet the requirements of AS/NZS 4129. Above DN63 or where the fitting does not meet the requirements of AS/NZS4129 the installer shall seek the advice of the manufacturer as there is a wide variation in capability across the variety of mechanical fittings that are available.

CURVING PE PIPE
Curving shall always be gradual and the pipe must never be kinked or bent around a corner, sharp object or a star picket. The pipe should be progressively supported with backfill material as the pipe is formed around the curve.

Information retrieved from PIPA (Plastics Industry Pipe Association of Australia Limited) https://pipa.com.au/.

DISCLAIMER

Disclaimer: As always with information supplied by Acu-Tech Piping Systems, we supply it as a guide in the interest of better understanding the technical properties of our products. However, the application of such information may involve engineering judgements which cannot be correctly made without intimate knowledge of all the conditions pertaining to a specific installation. Acu-Tech Piping Systems does not act as a consultant in this regard; the responsibility for the use of any information or advice contained herein rests solely with the user. It should not be used in place of a professional engineer's judgement or advice and is not intended as installation instructions.

See full disclaimer at www.acu-tech.com.au/information-disclaimer/

For our terms and conditions relating expressly to this catalogue, see: www.acu-tech.com.au/terms-conditions/

THE PE PIPE SYSTEMS SPECIALISTS

ACU-TECH.COM.AU

Contact us today
P: 1300 270 270
E: sales@acu-tech.com.au
ABN: 68 626 756 223

Locations across Australia
Perth
Kalgoorlie
Brisbane
Melbourne

ACU-TECH
PIPING SYSTEMS